Pentruder® CONCRETE CUTTING SYSTEMS	Spare part and maintenance list for Pentruder 8-20HF and 8-20iQ Wall saw			
	Unit: Pentruder 8-20HF Pentruder 8-20iQ	Date 2017-11-15	Rev	File Spare part and maintenance list for Pentruder 8-20HF and 8-20iQ.pdf

Content

Description	Page no.:
8-20HF Assembly	2
Chassis	4
Gearbox	6
Gear selector pinion	11
Index housing	13
Mainshaft	14
Layshaft	16
Slip clutch	18
Travel pinion	21
Gear Drive, arm rotation	23
Slip clutch arm	27
Intermediate gear arm rot.	29
Cover, oval	31
Arm	34
Blade guard rotary flange	36
Spindle	42
Arm housing	44
Water seal	48
Intermediate gear assy	50
DC Motor	51
Arm feed motor	57
Track rollers	61
Handle	67
8-20iQ Assembly	68
Arm	70

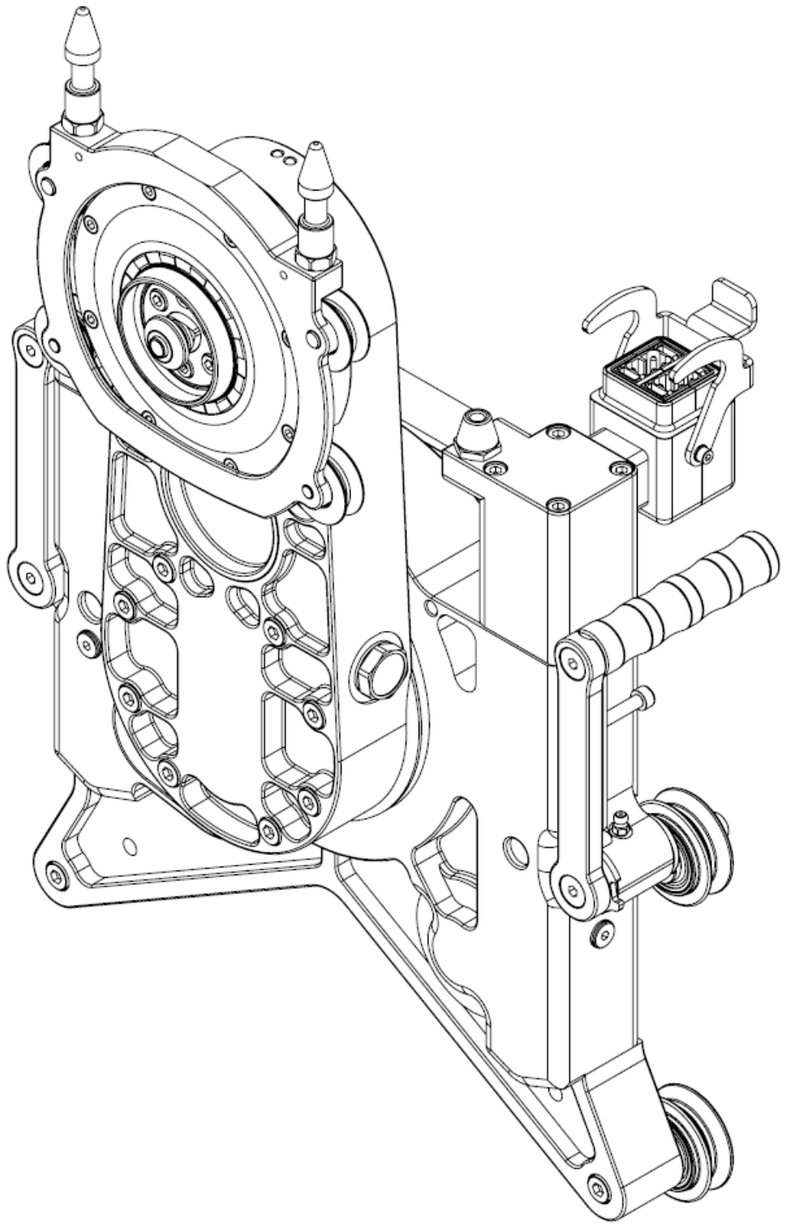

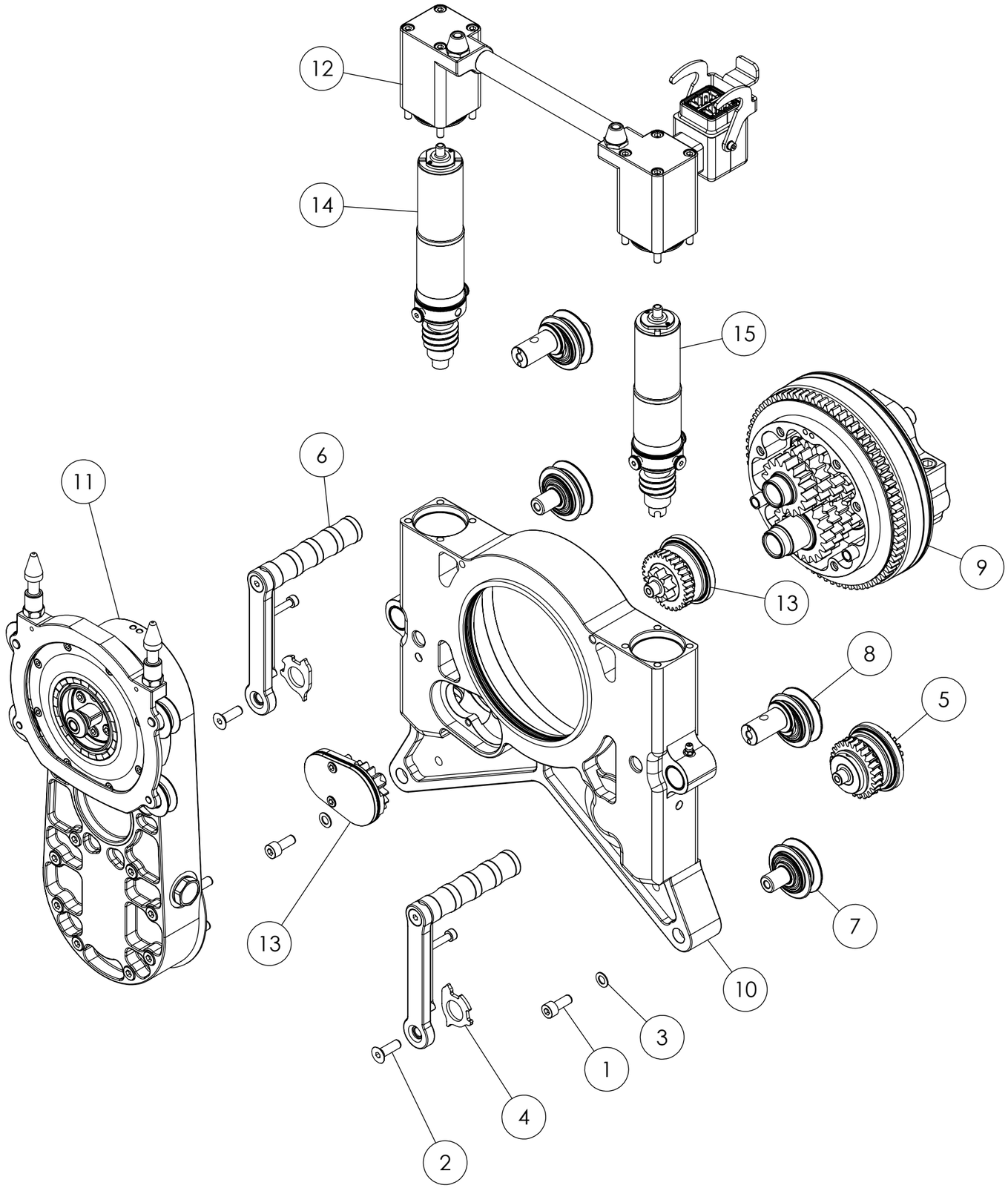

ITEM NO.	PART/ASSY NUMBER	DESCRIPTION	QTY.
1	121008020-12.9FZ	Allen screw DIN912 M8 x 20 12.9Z	2
2	123008025-10.9FZ	C/S Allen screw DIN7991 M8x25 10.9Z	2
3	22110810	Support ring 8 x 14 x 1 DIN988	2
4	28010200	Locking slider 6-10 / 12	2
5	34160201	Travel pinion, assembly	1
6	53010501	Handle 6 - 10/12 and HF saws cpl	2
7	A3400002	Lower Track Roller Assembly	2
8	A3400003	Upper Roller Assembly	2
9	A5600006	Gearbox Assembly 8-20HF and IQ	1
10	A5600008	Chassis Assembly 8-20HF and iQ	1
11	A5600010	Arm Assembly, 8-20HF	1
12	A5800002	DC Motor Cover Assembly	1
13	A5800005	Gear Drive Assembly, Arm Rotation	1
14	A6300001	Arm feed motor, 24V, 43:1, assy	1
15	A6300002	Travel motor 24V, 21:1 assy	1

Assy. Number		8-20HF Assy-NEW CHASSIS
Assy. Description		8-20HF Assy-NEW CHASSIS
Date	2011-06-27	TRACTIVE
Revision	--01	
Drawn	KRT	Gjutargatan 54 S-781 70 Borlänge Tel +46 243 22 11 55 Fax +46 243 22 11 80 www.tractive.se / www.pentruder.com
Approved	AJ	
Supercedes		

THIS DRAWING IS THE PROPERTY OF **Tractive AB**. ITS SUBMISSION DOES NOT INCLUDE OR CARRY THE RIGHT TO MAKE, USE OR SELL WHAT IS ILLUSTRATED WITHOUT THE WRITTEN CONSENT OF **Tractive AB**.

Scale	1:4	
Drawing Size	A3	SHEET 1 OF 2

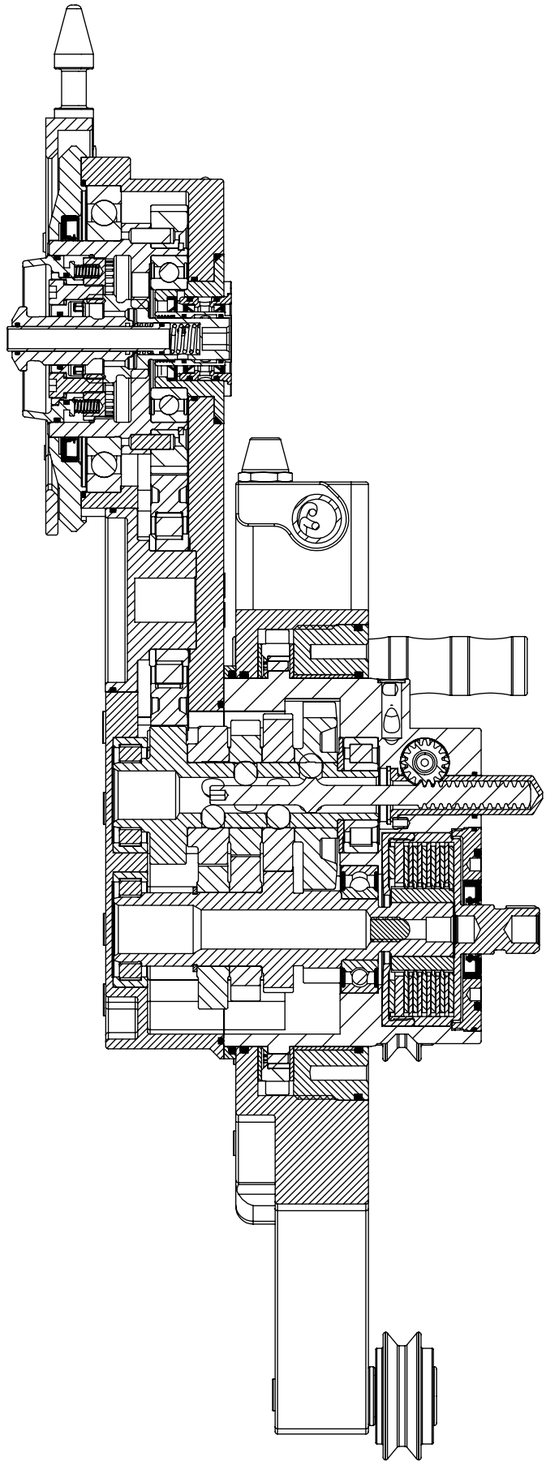

Section View

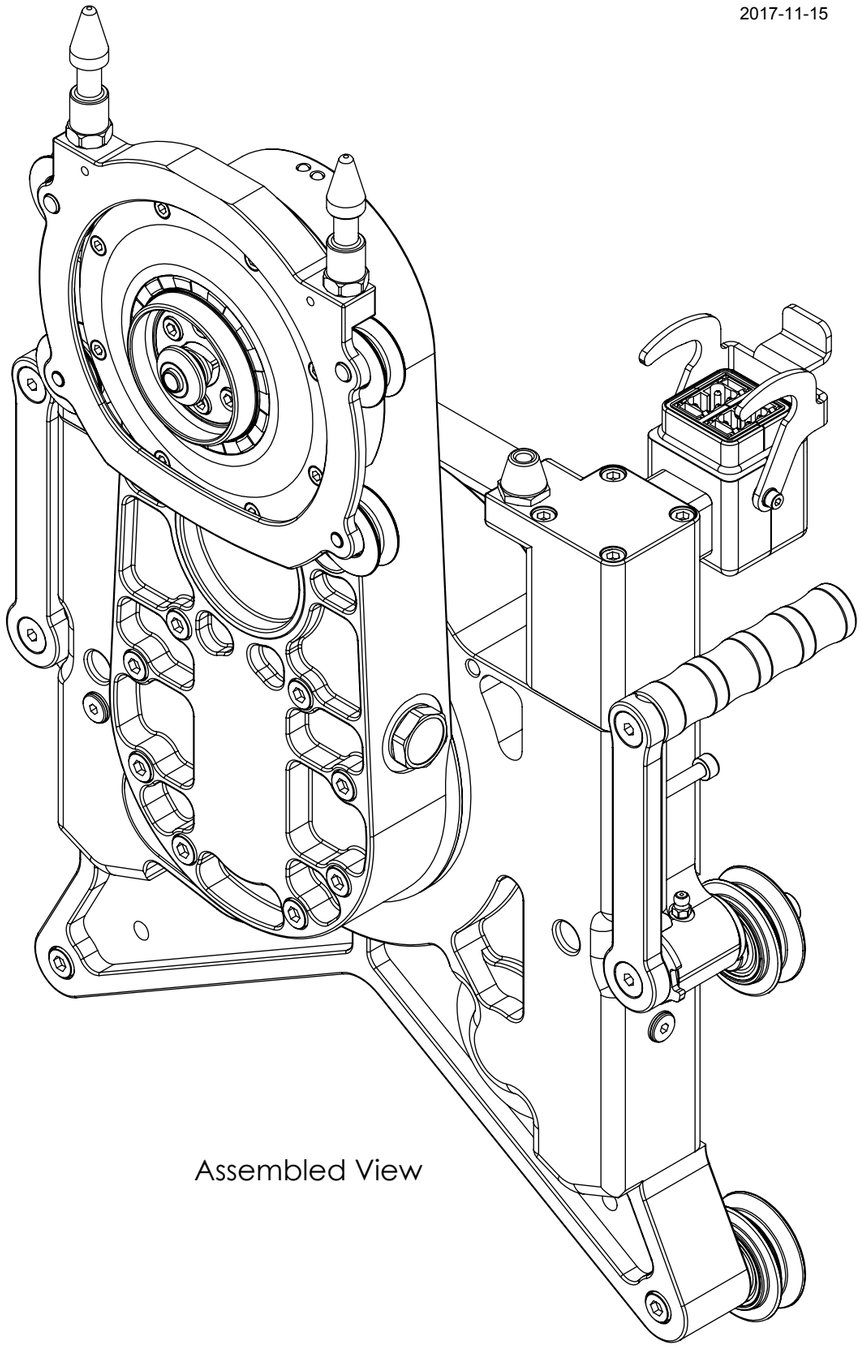

Assembled View

Assy. Number		8-20HF Assy-NEW CHASSIS
Assy. Description		8-20HF Assy-NEW CHASSIS
Date	2011-06-27	TRACTIVE
Revision	--01	
Drawn	KRT	Gjutargatan 54 S-781 70 Borlänge Tel +46 243 22 11 55 Fax +46 243 22 11 80 www.tractive.se / www.pentruder.com
Approved	AJ	
Supercedes		

THIS DRAWING IS THE PROPERTY OF **Tractive AB**. ITS SUBMISSION DOES NOT INCLUDE OR CARRY THE RIGHT TO MAKE, USE OR SELL WHAT IS ILLUSTRATED WITHOUT THE WRITTEN CONSENT OF **Tractive AB**.

Scale	1:2.5	
Drawing Size	A3	SHEET 2 OF 2

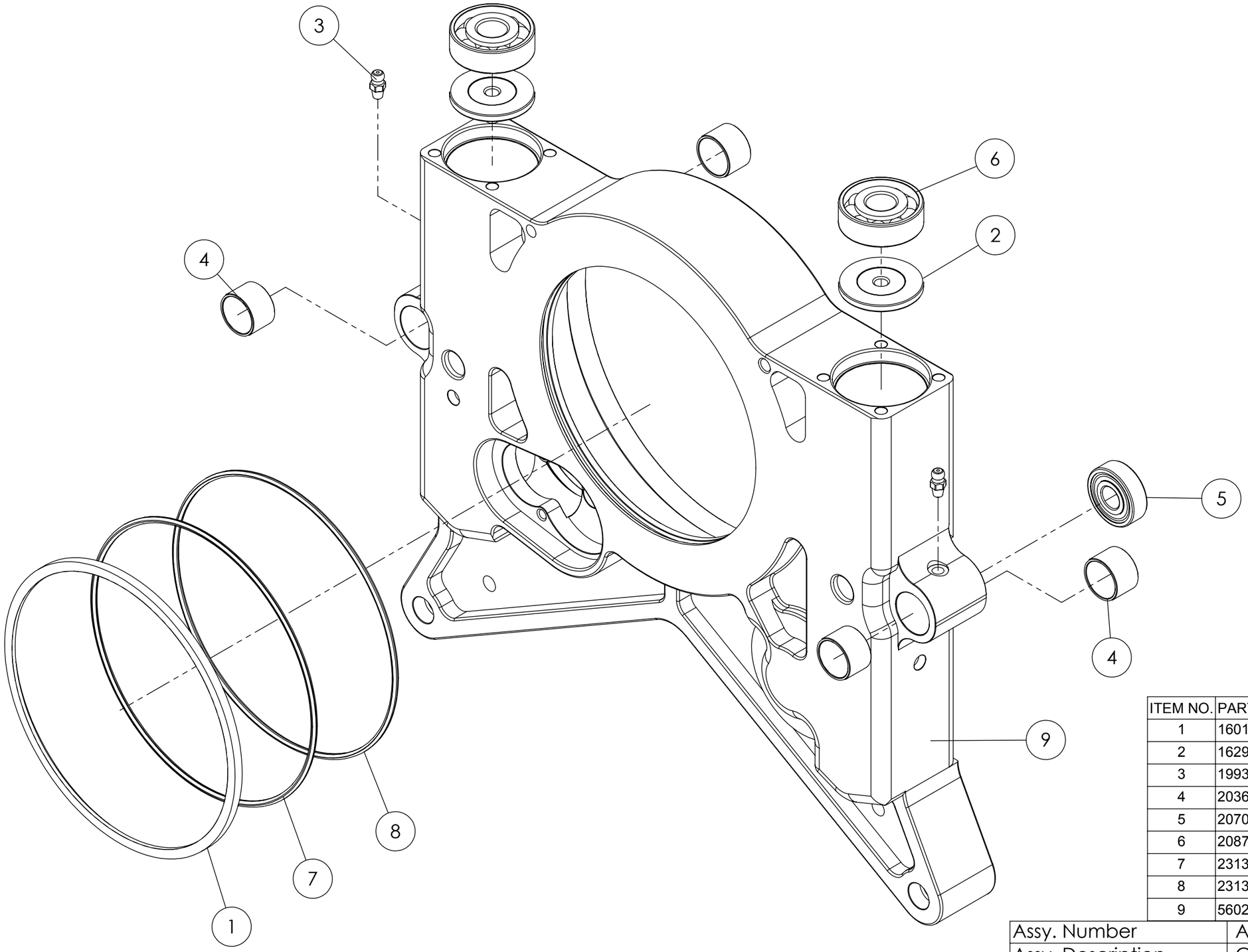

ITEM NO.	PART NUMBER	DESCRIPTION	QTY.
1	16010400	Axial support ring arm - gearbox	1
2	16290100	Washer, for bearing extraction	2
3	19930261	Grease nipple, M6 x 1	2
4	2036202315	Bushing	4
5	20706201	Radial support 6201-2Z/C3	1
6	20877302	Angular contact ball bearing, 7302-BEP	2
7	23130144	O-Ring 144 x 3 NBR 70	1
8	23130150	O-Ring, 150 x 3 NBR 70	1
9	56020900	Chassis, 8-20, V3	1

Assy. Number	A5600008
Assy. Description	Chassis Assembly 8-20HF and iQ
Date	2011-07-11
Revision	--03
Drawn	KRT
Approved	
Supercedes	

TRACTIVE

Gjutargatan 54 S-781 70 Borlänge
Tel +46 243 22 11 55
Fax +46 243 22 11 80
www.tractive.se / www.pentruder.com

THIS DRAWING IS THE PROPERTY OF **Tractive AB**. ITS SUBMISSION DOES NOT INCLUDE OR CARRY THE RIGHT TO MAKE, USE OR SELL WHAT IS ILLUSTRATED WITHOUT THE WRITTEN CONSENT OF **Tractive AB**.

Scale	1:2	
Drawing Size	A3	SHEET 1 OF 3

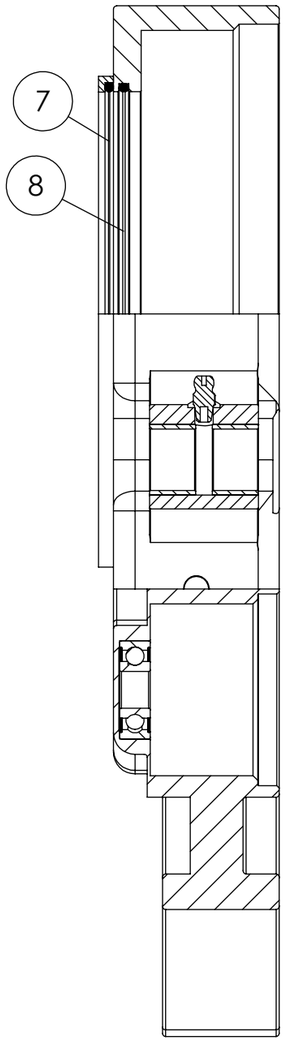

Partial Section Views

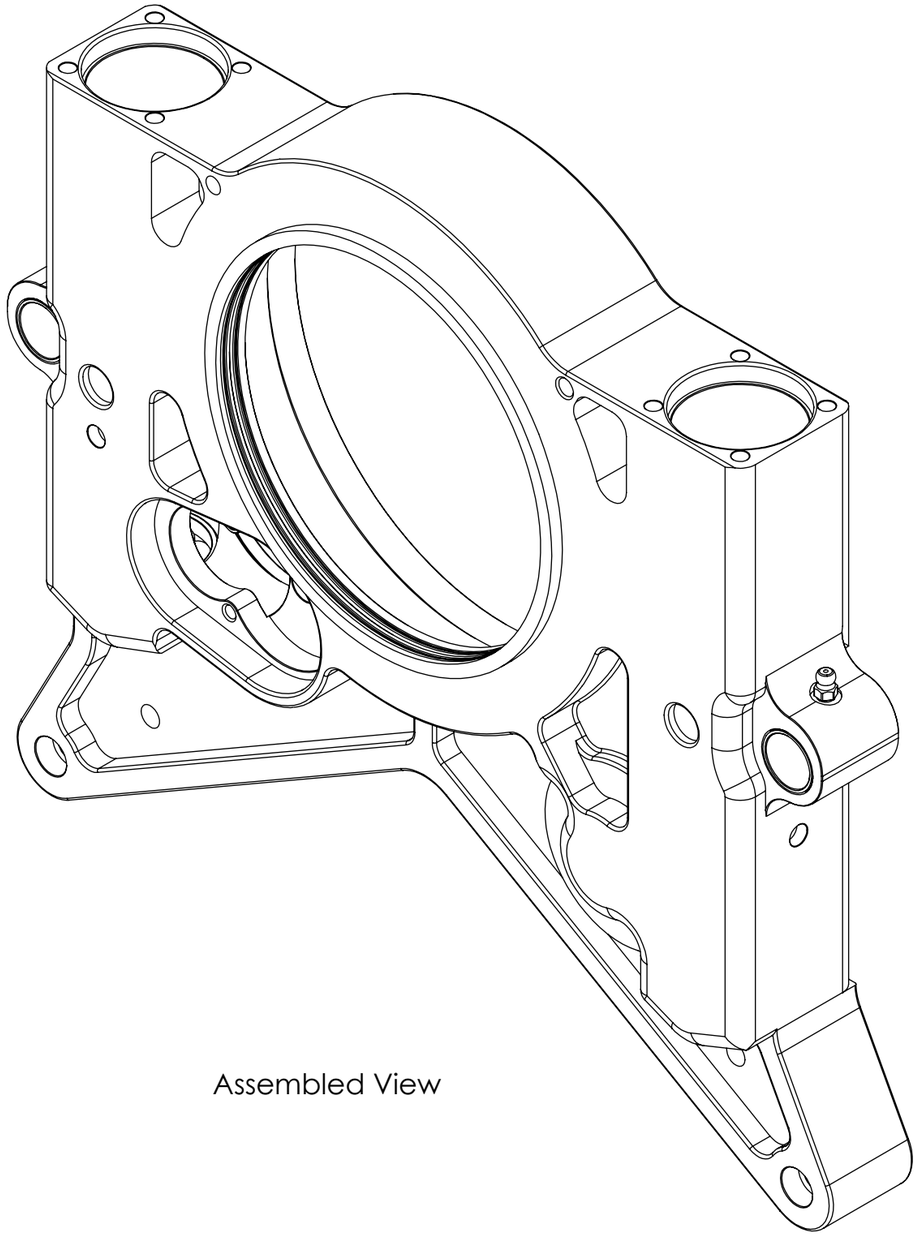

Assembled View

Assy. Number		A5600008
Assy. Description		Chassis Assembly 8-20HF and iQ
Date	2011-07-11	TRACTIVE
Revision	--03	Gjutargatan 54 S-781 70 Borlänge Tel +46 243 22 11 55 Fax +46 243 22 11 80 www.tractive.se / www.pentruder.com
Drawn	KRT	
Approved		
Supercedes		

THIS DRAWING IS THE PROPERTY OF **Tractive AB**. ITS SUBMISSION DOES NOT INCLUDE OR CARRY THE RIGHT TO MAKE, USE OR SELL WHAT IS ILLUSTRATED WITHOUT THE WRITTEN CONSENT OF **Tractive AB**.

Scale	1:2	
Drawing Size	A3	SHEET 2 OF 3

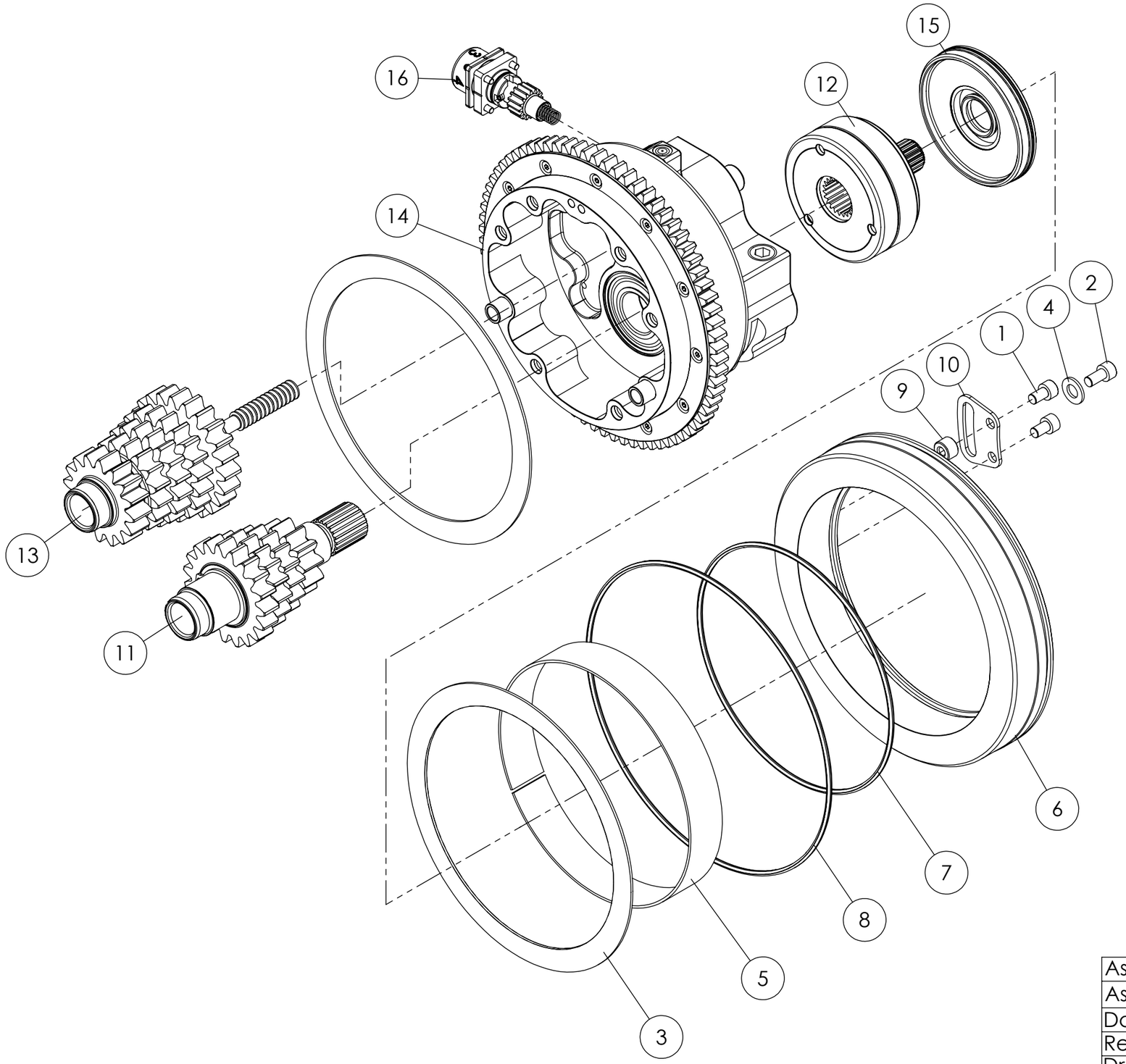

ITEM NO.	PART NUMBER	DESCRIPTION	QTY.
1	121006010-8.8FZ	Allen Screw DIN912 M6 x 10 8.8Z	2
2	121006012-8-8FZ	Allen Screw DIN912 M6 x 12 8.8Z	1
3	16010200	Axial bearing 178x150.2x1.5	2
4	16400800	Plain washer 8.4 x 16 x 1.6 /M8	1
5	2021025000	Bearing strip 25 x 470 x 1.5	1
6	22010100	Bearing ring, Arm 6 - 16 / 8 - 20	1
7	23130150	O-Ring, 150 x 3 NBR 70	1
8	23130185	O-ring 185 x 3 NBR 70	1
9	26280500	Lock nut, bearing ring	2
10	28010100	Locking washer, bearing ring	1
11	34190601	Layshaft, 8-20, assembly	1
12	57510201	Slip clutch CBK/8-20HF/iQ Ver2 cpl	1
13	A3400004	Mainshaft Assembly 8-20	1
14	A5600007	Gearbox Housing Assembly 8-20HF	1
15	A5800007	Slip Clutch Cover Assembly	1
16	A5900001	Gear Selector Pinion Assembly	1

Assy. Number		A5600006
Assy. Description		Gearbox Assembly 8-20HF and IQ
Date	2011-07-11	TRACTIVE
Revision	--05	Gjutargatan 54 S-781 70 Borlänge Tel +46 243 22 11 55 Fax +46 243 22 11 80 www.tractive.se / www.pentruder.com
Drawn	KRT	
Approved		
Supercedes		

THIS DRAWING IS THE PROPERTY OF **Tractive AB**. ITS SUBMISSION DOES NOT INCLUDE OR CARRY THE RIGHT TO MAKE, USE OR SELL WHAT IS ILLUSTRATED WITHOUT THE WRITTEN CONSENT OF **Tractive AB**.

Scale	1:2.5	
Drawing Size	A3	SHEET 1 OF 3

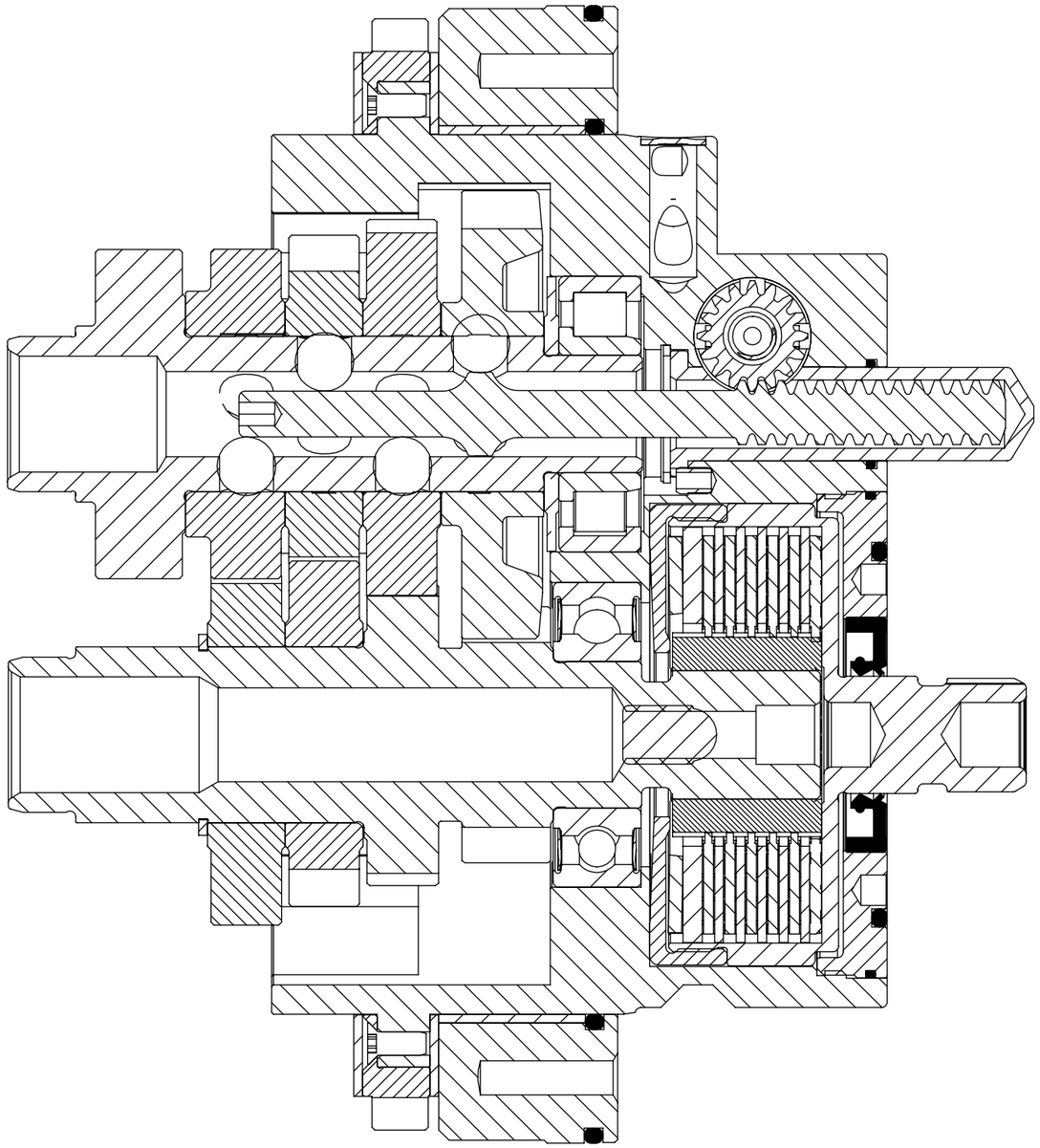

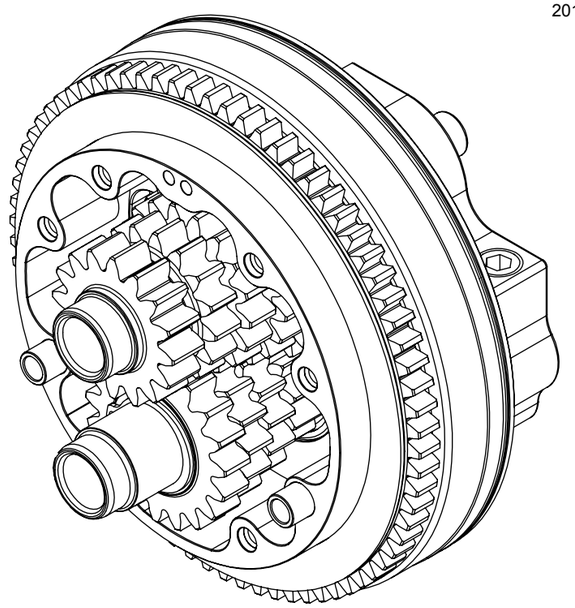

Assembled ISO View

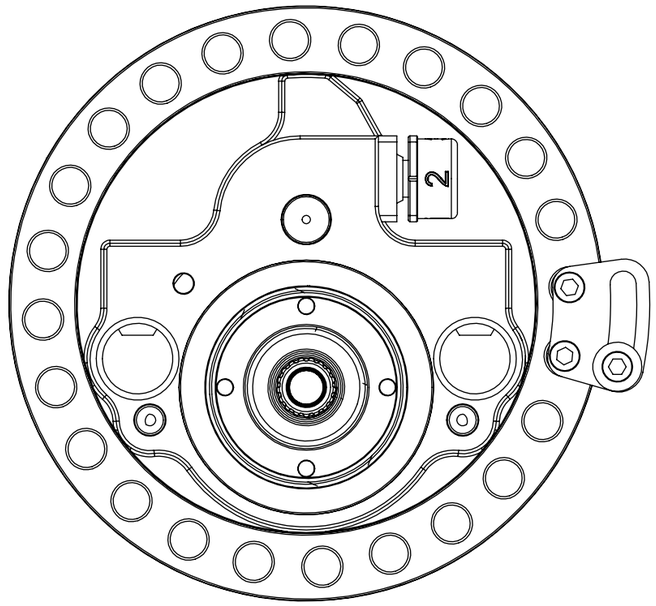

Assembled Back View

Assy. Number		A5600006
Assy. Description		Gearbox Assembly 8-20HF and IQ
Date	2011-07-11	TRACTIVE
Revision	01	
Drawn	KRT	Gjutargatan 54 S-781 70 Borlänge Tel +46 243 22 11 55 Fax +46 243 22 11 80 www.tractive.se / www.pentruder.com
Approved		
Supercedes		

THIS DRAWING IS THE PROPERTY OF **Tractive AB**. ITS SUBMISSION DOES NOT INCLUDE OR CARRY THE RIGHT TO MAKE, USE OR SELL WHAT IS ILLUSTRATED WITHOUT THE WRITTEN CONSENT OF **Tractive AB**.

Scale	1:3	
Drawing Size	A3	SHEET 2 OF 3

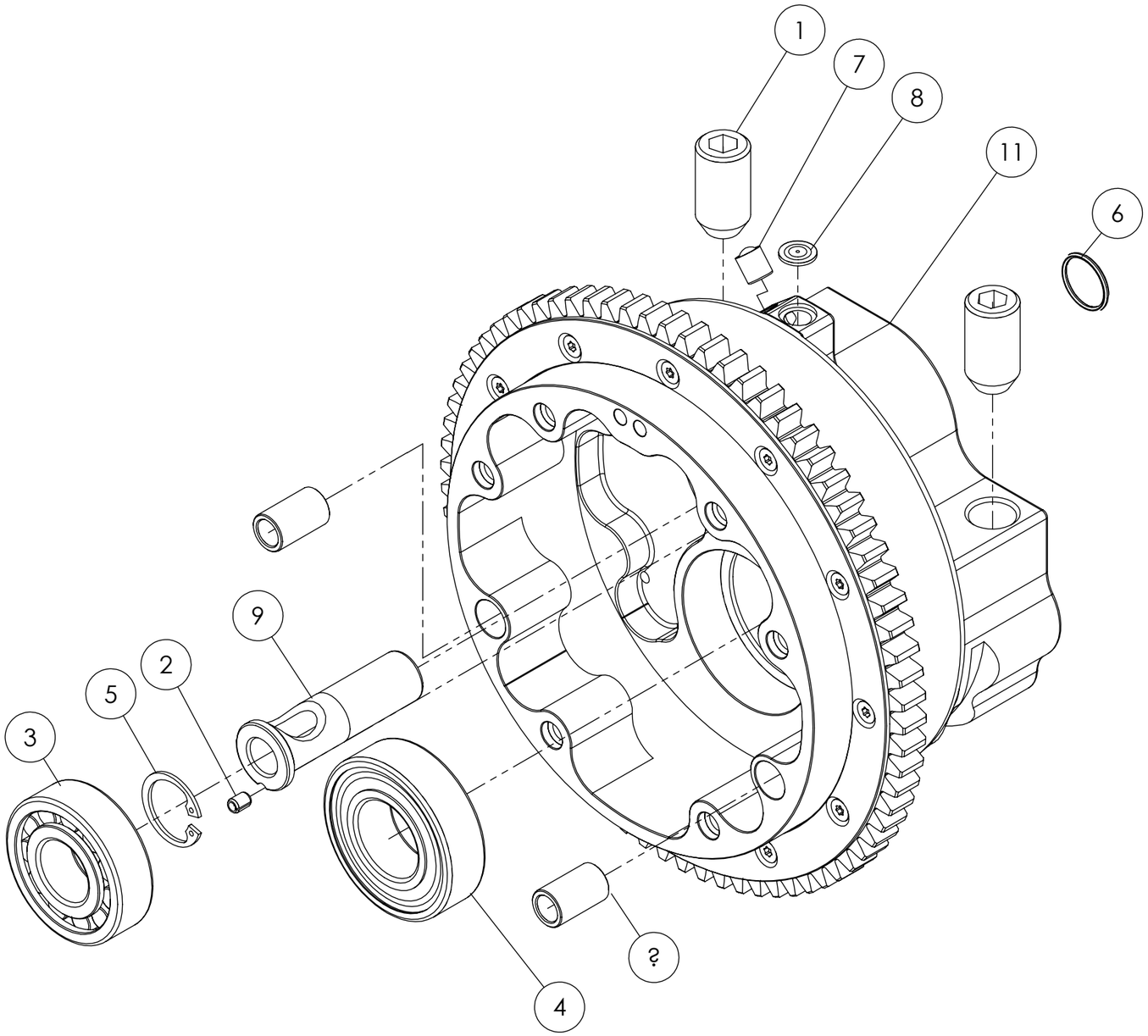

ITEM NO.	PART NUMBER	DESCRIPTION	QTY.
1	14220100	Coupling screw	2
2	17404060	Split pin Ø 4 x 6	1
3	20150204	Cyl. roller b. NJ 204 ECP	1
4	20756205	Ball bearing, 6205 2RSH	1
5	21402200	Circlip, DIN 471 22 x 1.2	1
6	23115016	O-ring 16 x 1.5 NBR 70	1
7	25010200	Plug MB 800 - 080	1
8	25110800	Plug, Ø 7/16"	1
9	26240200	Sleeve gear shift rack 8 - 20 HF	1
10	26280200	Dowel 8,5 x 12 x 19,75	2
11	56030401	Gear Housing 8-20 HF with Gear Ring	1

Assy. Number		A5600007
Assy. Description		Gearbox Housing Assembly 8-20HF
Date	2011-07-13	TRACTIVE
Revision	01	
Drawn	KRT	Gjutargatan 54 S-781 70 Borlänge Tel +46 243 22 11 55 Fax +46 243 22 11 80 www.tractive.se / www.pentruder.com
Approved		
Supercedes		

THIS DRAWING IS THE PROPERTY OF **Tractive AB**. ITS SUBMISSION DOES NOT INCLUDE OR CARRY THE RIGHT TO MAKE, USE OR SELL WHAT IS ILLUSTRATED WITHOUT THE WRITTEN CONSENT OF **Tractive AB**.

Scale	1:2	
Drawing Size	A3	SHEET 1 OF 2

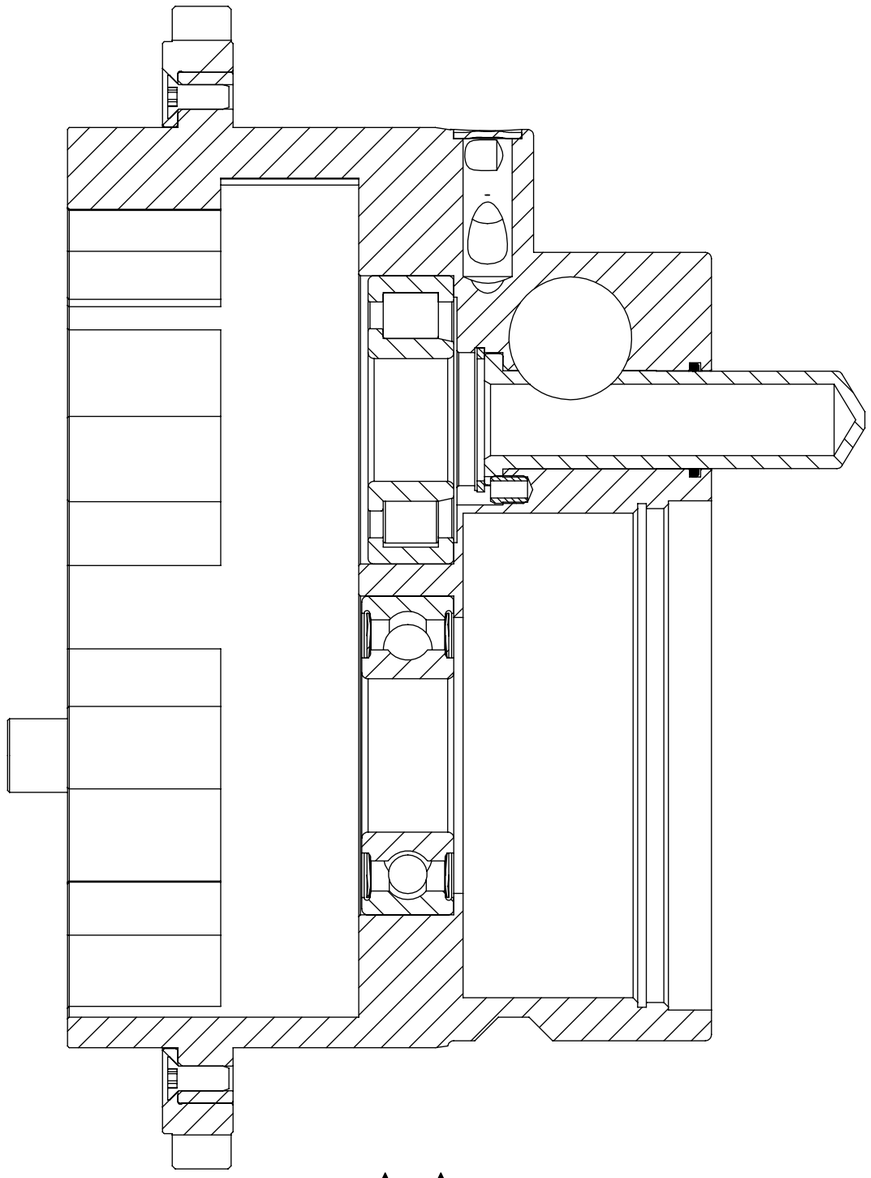

A-A

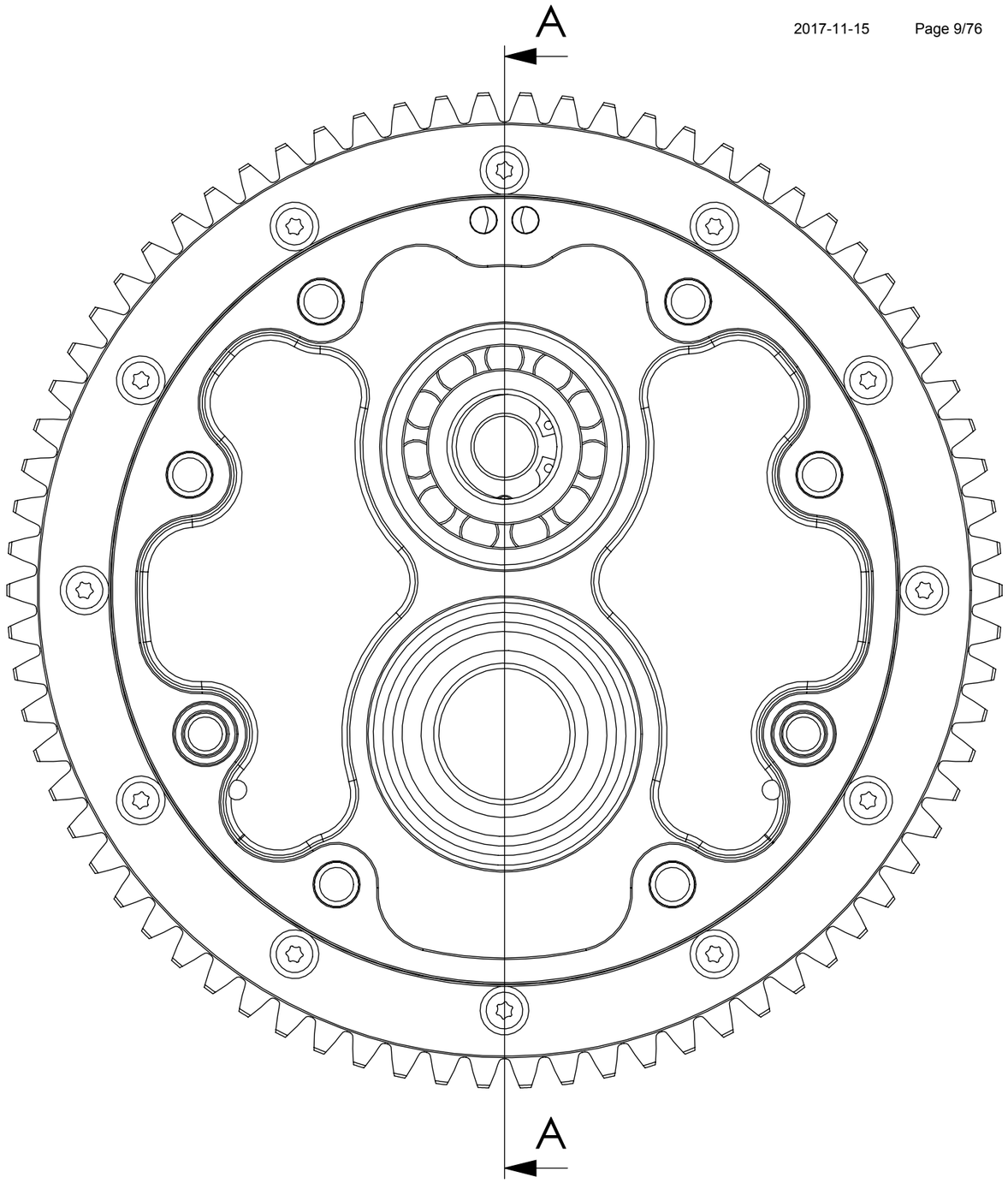

Assembled View

Assy. Number		A5600007
Assy. Description		Gearbox Housing Assembly 8-20HF
Date	2011-07-13	TRACTIVE
Revision	01	Gjutargatan 54 S-781 70 Borlänge Tel +46 243 22 11 55 Fax +46 243 22 11 80 www.tractive.se / www.pentruder.com
Drawn	KRT	
Approved		
Supercedes		

THIS DRAWING IS THE PROPERTY OF **Tractive AB**. ITS SUBMISSION DOES NOT INCLUDE OR CARRY THE RIGHT TO MAKE, USE OR SELL WHAT IS ILLUSTRATED WITHOUT THE WRITTEN CONSENT OF **Tractive AB**.

Scale	1:1	
Drawing Size	A3	SHEET 2 OF 2

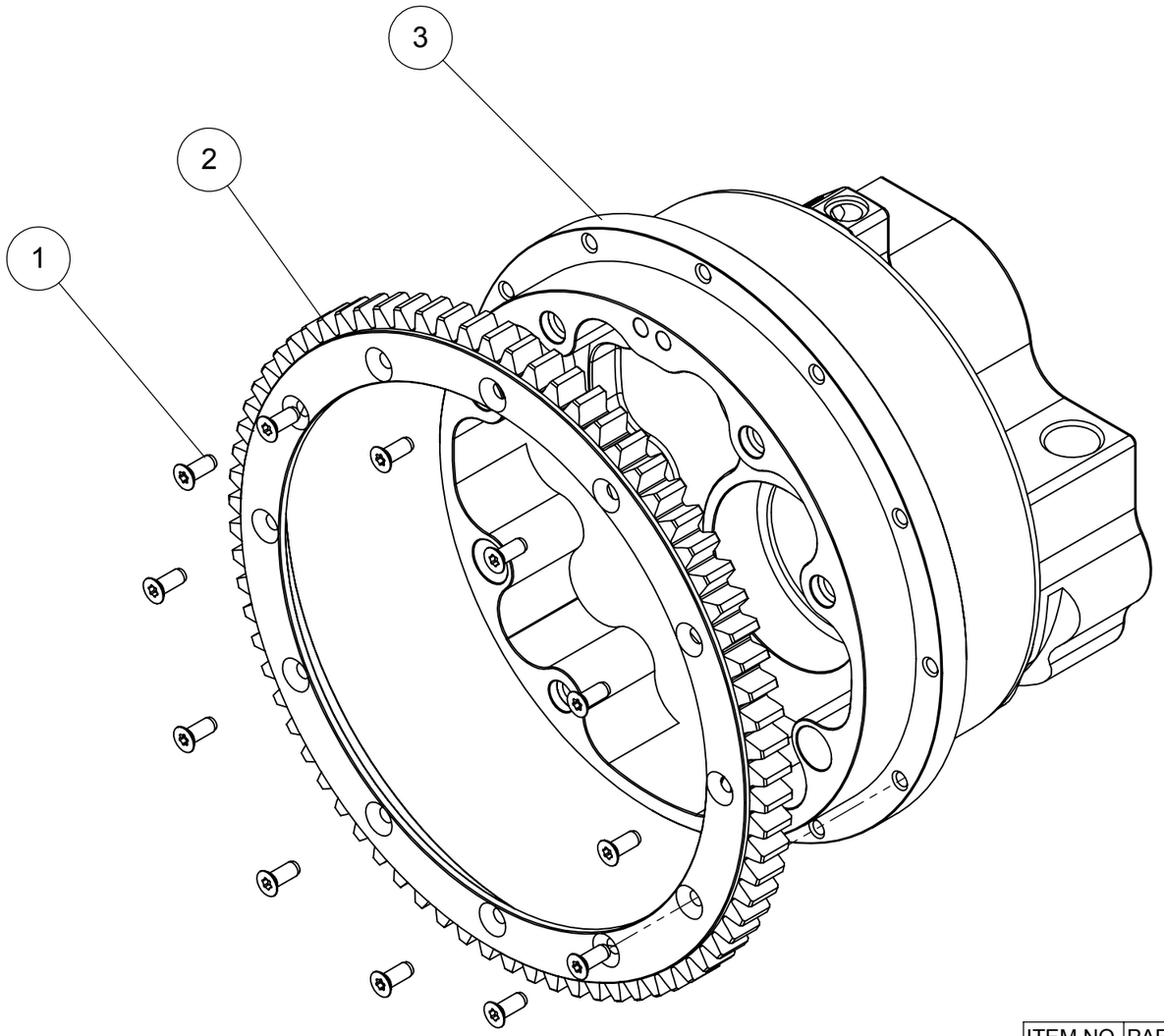

ITEM NO.	PART/ASSY NUMBER	DESCRIPTION	QTY.
1	121404010	C/S Torx screw ISO7046 M4x10	12
2	35360100	Ring gear, arm rotation	1
3	56030400	Gearbox housing, 8-20 HF	1

Suppliers Part Number	Supercedes	Date 2017-01-04	Part Number **56030401**
Material Code	Material Dimension	Procurement	Description Gear Housing 8-20 HF with Gear Ring
Material	Geometric Tolerance	Proj	
Derived From	Scale 1:2 / Mass $PRP@Mass	Sheet 1/1	
Drawn by JG	Approved by AJ	Designed by	

THIS DRAWING IS THE PROPERTY OF Tractive AB. ITS SUBMISSION DOES NOT INCLUDE OR CARRY THE RIGHT TO MAKE, USE OR SELL WHAT IS ILLUSTRATED WITHOUT THE WRITTEN CONSENT OF Tractive AB.

Revision --00

TRACTIVE
Gjutargatan 54 S-781 70 Borlänge
Tel +46 243 22 11 55 Fax +46 243 22 11 80
www.tractive.se / www.pentruder.com

Dimensions in mm

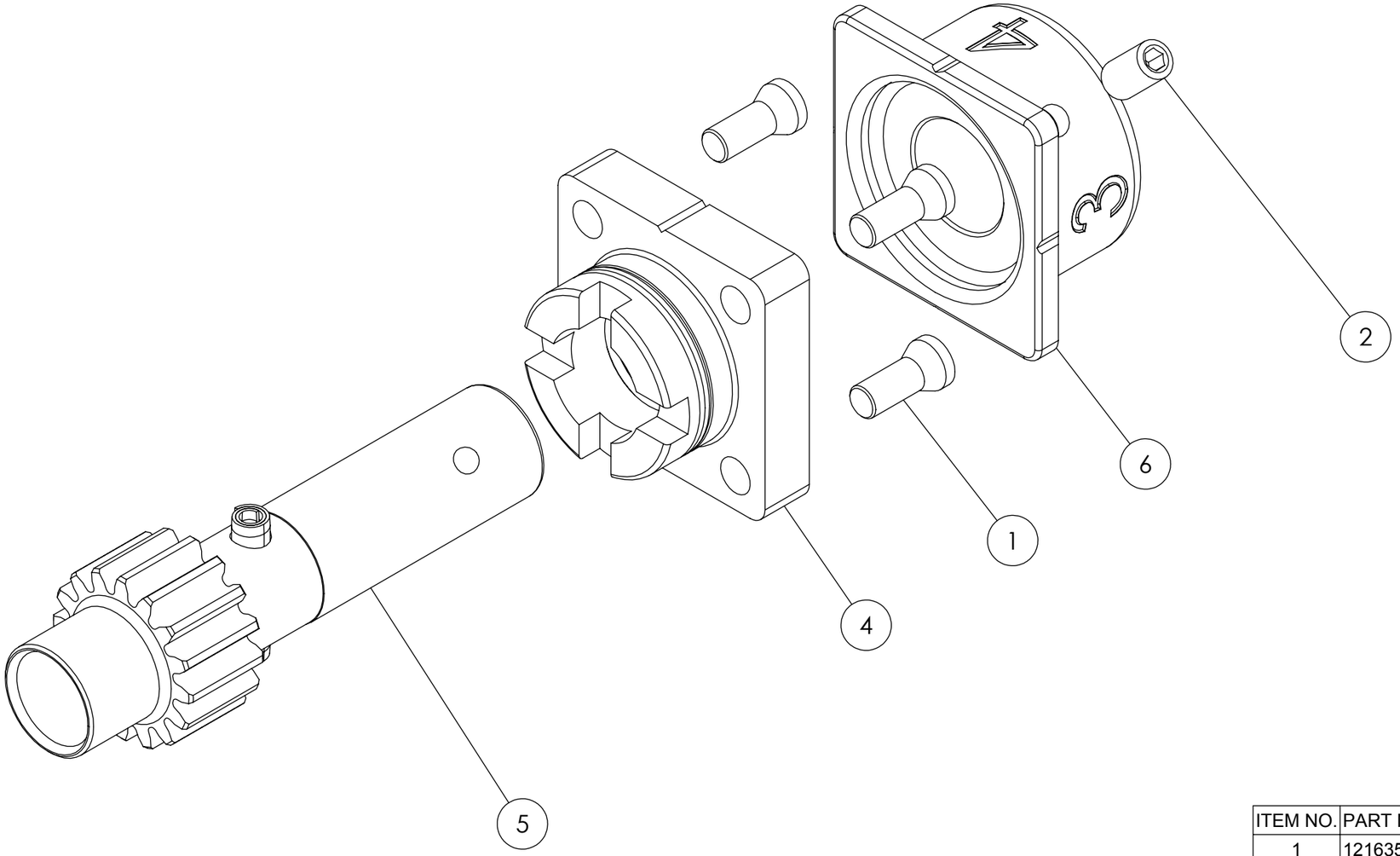

ITEM NO.	PART NUMBER	DESCRIPTION	QTY.
1	121635010	C/S Torx screw M3.5 x 12	4
2	122904008	Grub screw MS6SS M4 x 8	1
3	32160831	Spring 1.6 x 8 x 31.5 ID=6.4	1
4	57230201	Index housing 6 - 16 / 8 - 20 cpl	1
5	59440100	Index pinion 6 - 16 / 8 - 20	1
6	59550300	Index knob, 8 - 20HF, 8-20iQ	1

Assy. Number		A5900001
Assy. Description		Gear Selector Pinion Assembly
Date	2011-07-14	TRACTIVE
Revision	01	Gjutargatan 54 S-781 70 Borlänge Tel +46 243 22 11 55 Fax +46 243 22 11 80 www.tractive.se / www.pentruder.com
Drawn	KRT	
Approved		
Supercedes		

THIS DRAWING IS THE PROPERTY OF **Tractive AB**. ITS SUBMISSION DOES NOT INCLUDE OR CARRY THE RIGHT TO MAKE, USE OR SELL WHAT IS ILLUSTRATED WITHOUT THE WRITTEN CONSENT OF **Tractive AB**.

Scale	1.25:1	
Drawing Size	A3	SHEET 1 OF 2

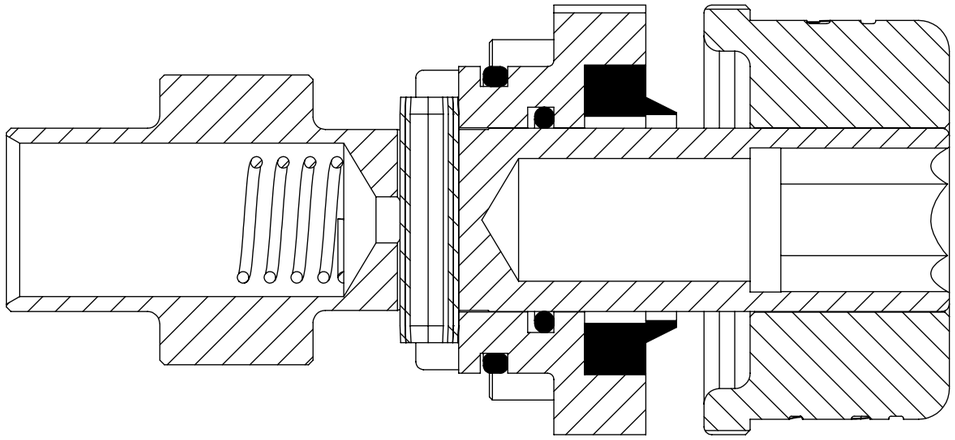

SECTION A-A

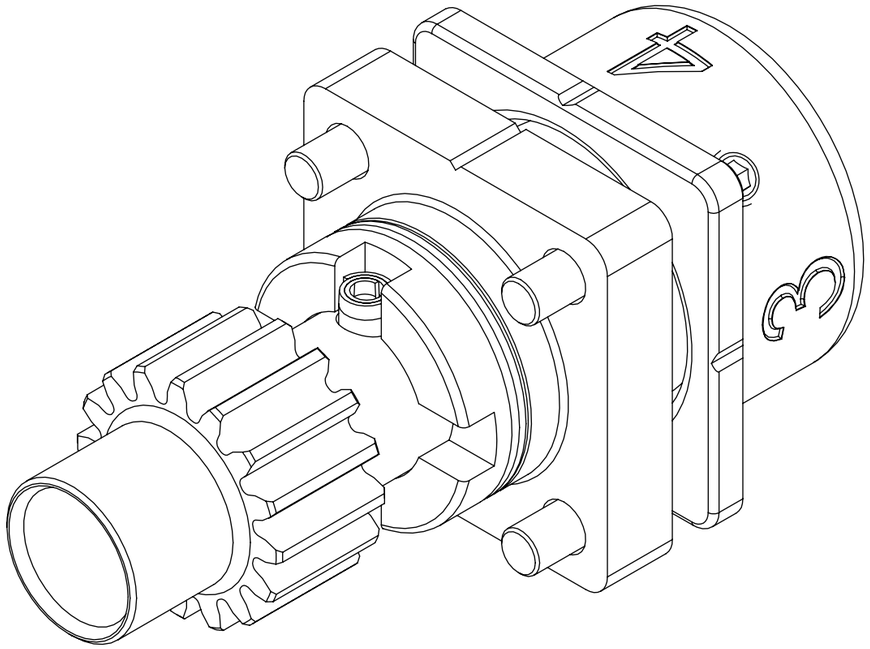

Assembled View

Assy. Number		A5900001
Assy. Description		Gear Selector Pinion Assembly
Date	2011-07-14	TRACTIVE
Revision	01	Gjutargatan 54 S-781 70 Borlänge Tel +46 243 22 11 55 Fax +46 243 22 11 80 www.tractive.se / www.pentruder.com
Drawn	KRT	
Approved		
Supercedes		

THIS DRAWING IS THE PROPERTY OF **Tractive AB**. ITS SUBMISSION DOES NOT INCLUDE OR CARRY THE RIGHT TO MAKE, USE OR SELL WHAT IS ILLUSTRATED WITHOUT THE WRITTEN CONSENT OF **Tractive AB**.

Scale	2.5:1	
Drawing Size	A3	SHEET 2 OF 2

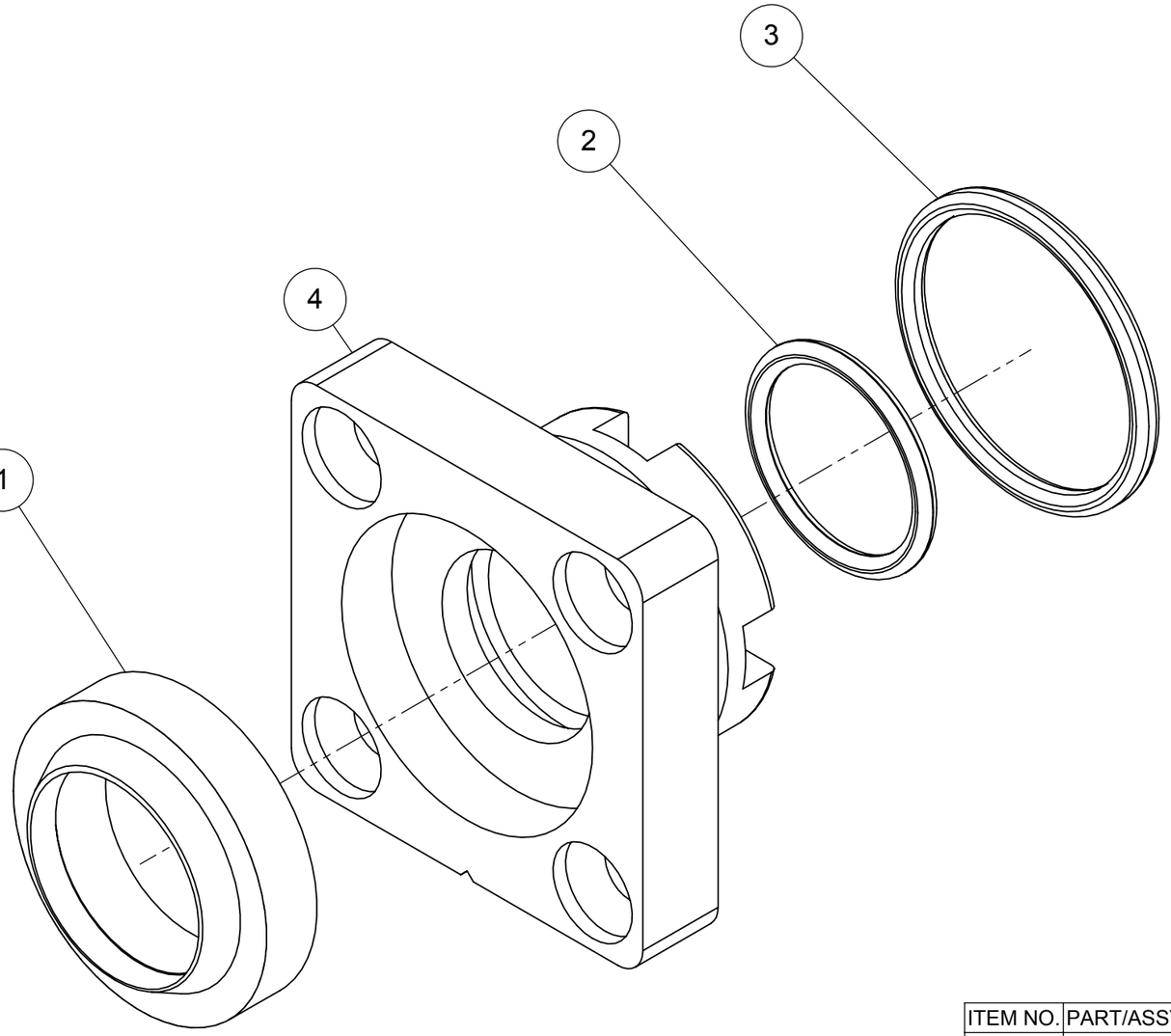

ITEM NO.	PART/ASSY NUMBER	DESCRIPTION	QTY.
1	23091220	Scraper 12 x 20 x 4 6N	1
2	23115012	O-ring 12 x 1.5 NBR 70	1
3	23115016	O-ring 16 x 1.5 NBR 70	1
4	57230200	Index housing	1

Suppliers Part Number	Supercedes	Date 2017-01-05	Part Number **57230201**
Material Code	Material Dimension	Procurement	Description Index housing 6 - 16 / 8 - 20 cpl
Material	Geometric Tolerance	Proj	
Derived From	Scale 2:1 / Mass $PRP@Mass	Sheet 1/2	
Drawn by JG	Approved by AJ	Designed by	

THIS DRAWING IS THE PROPERTY OF Tractive AB. ITS SUBMISSION DOES NOT INCLUDE OR CARRY THE RIGHT TO MAKE, USE OR SELL WHAT IS ILLUSTRATED WITHOUT THE WRITTEN CONSENT OF Tractive AB.

Revision --02

TRACTIVE
Gjutargatan 54 S-781 70 Borlänge
Tel +46 243 22 11 55 Fax +46 243 22 11 80
www.tractive.se / www.pentruder.com

Dimensions in mm

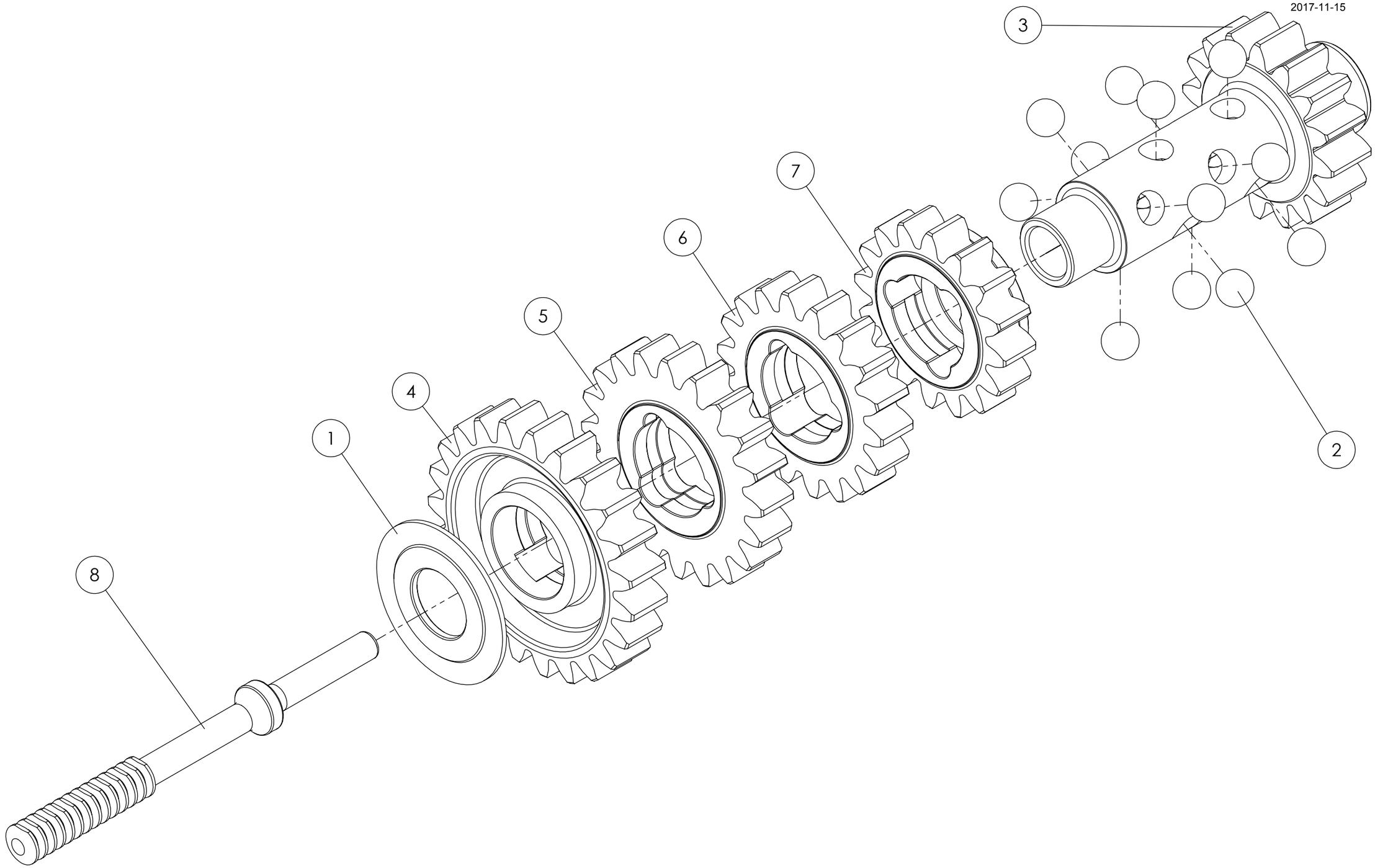

ITEM NO.	PART NUMBER	DESCRIPTION	QTY.
1	20193300	Axial bearing, 8-20HF gearbox	1
2	20310900	Ball bearing ball, RB9	12
3	34200500	Mainshaft, 8-20	1
4	35210100	Gear on mainshaft 1st gear	1
5	35220100	Gear on mainshaft 2nd gear	1
6	35230100	Gear on mainshaft 3rd gear	1
7	35240100	Gear wheel on mainshaft 4th gear	1
8	59330400	Shift rod, 8-20	1

Assy. Number		A3400004
Assy. Description		Mainshaft Assembly 8-20
Date	2011-07-13	TRACTIVE
Revision	01	
Drawn	KRT	Gjutargatan 54 S-781 70 Borlänge Tel +46 243 22 11 55 Fax +46 243 22 11 80 www.tractive.se / www.pentruder.com
Approved		
Supercedes		

THIS DRAWING IS THE PROPERTY OF **Tractive AB**. ITS SUBMISSION DOES NOT INCLUDE OR CARRY THE RIGHT TO MAKE, USE OR SELL WHAT IS ILLUSTRATED WITHOUT THE WRITTEN CONSENT OF **Tractive AB**.

Scale	1:1.5	
Drawing Size	A3	SHEET 1 OF 2

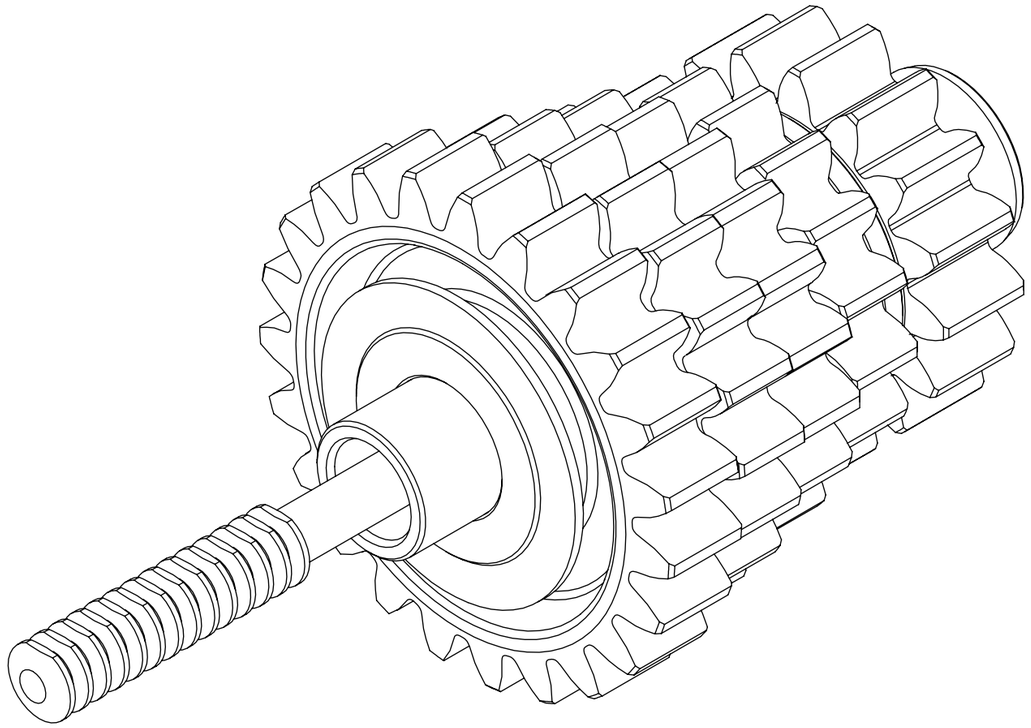

Assembled View

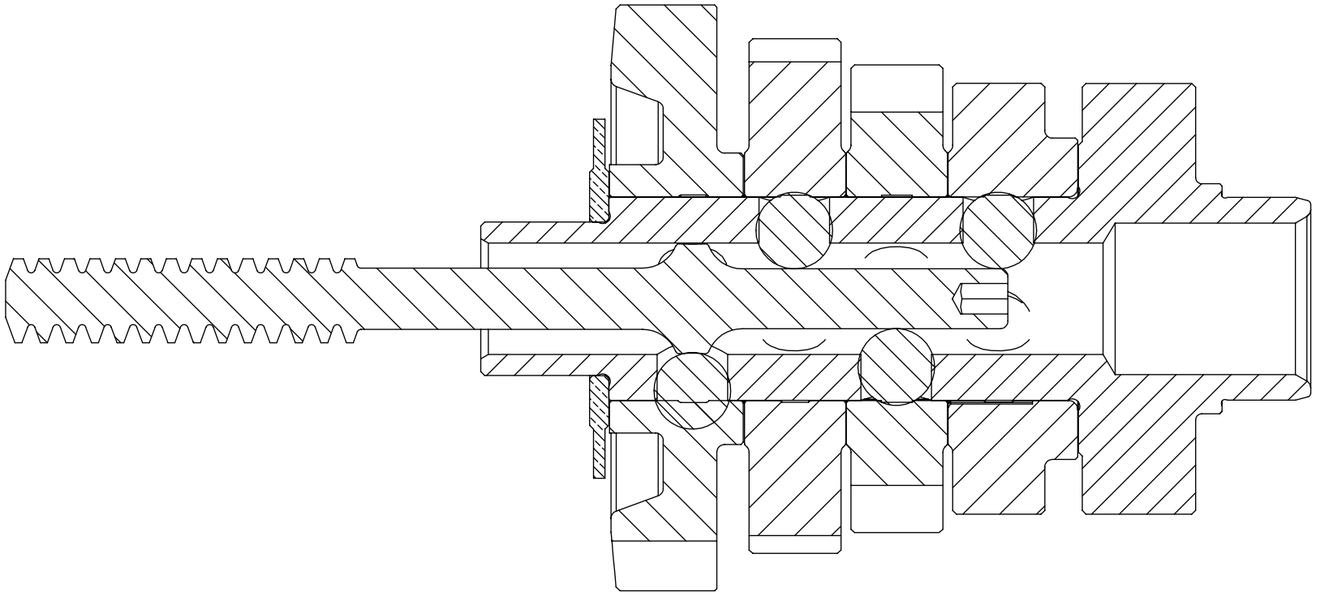

Section View

Assy. Number		A3400004
Assy. Description		Mainshaft Assembly 8-20
Date	2011-07-13	TRACTIVE
Revision	01	Gjutargatan 54 S-781 70 Borlänge Tel +46 243 22 11 55 Fax +46 243 22 11 80 www.tractive.se / www.pentruder.com
Drawn	KRT	
Approved		
Supercedes		

THIS DRAWING IS THE PROPERTY OF **Tractive AB**. ITS SUBMISSION DOES NOT INCLUDE OR CARRY THE RIGHT TO MAKE, USE OR SELL WHAT IS ILLUSTRATED WITHOUT THE WRITTEN CONSENT OF **Tractive AB**.

Scale	1.25:1	
Drawing Size	A3	SHEET 2 OF 2

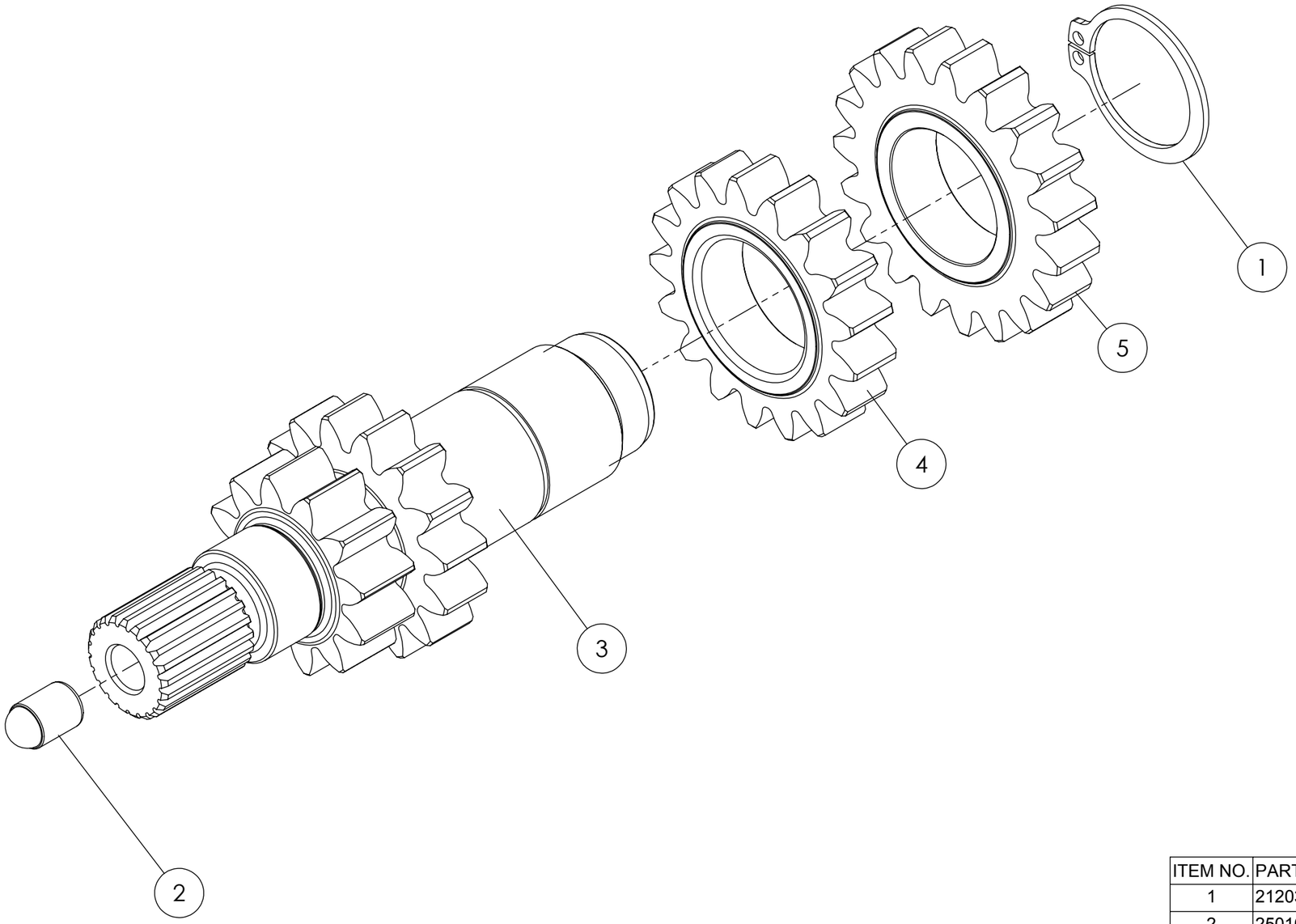

ITEM NO.	PART NUMBER	DESCRIPTION	QTY.
1	21203000	Circlip, DIN 471, 30 mm	1
2	25010300	Plug, 10mm	1
3	34190600	Layshaft, 8-20HF gearbox	1
4	35130100	Gear on layshaft 3rd gear	1
5	35140100	Gear on layshaft 4th gear	1

Assy. Number		34190601
Assy. Description		Layshaft, 8-20, assembly
Date	2011-07-14	TRACTIVE
Revision	01	Gjutargatan 54 S-781 70 Borlänge
Drawn	KRT	Tel +46 243 22 11 55
Approved		Fax +46 243 22 11 80
Supercedes		www.tractive.se / www.pentruder.com

THIS DRAWING IS THE PROPERTY OF **Tractive AB**. ITS SUBMISSION DOES NOT INCLUDE OR CARRY THE RIGHT TO MAKE, USE OR SELL WHAT IS ILLUSTRATED WITHOUT THE WRITTEN CONSENT OF **Tractive AB**.

Scale	1:1	
Drawing Size	A3	SHEET 1 OF 2

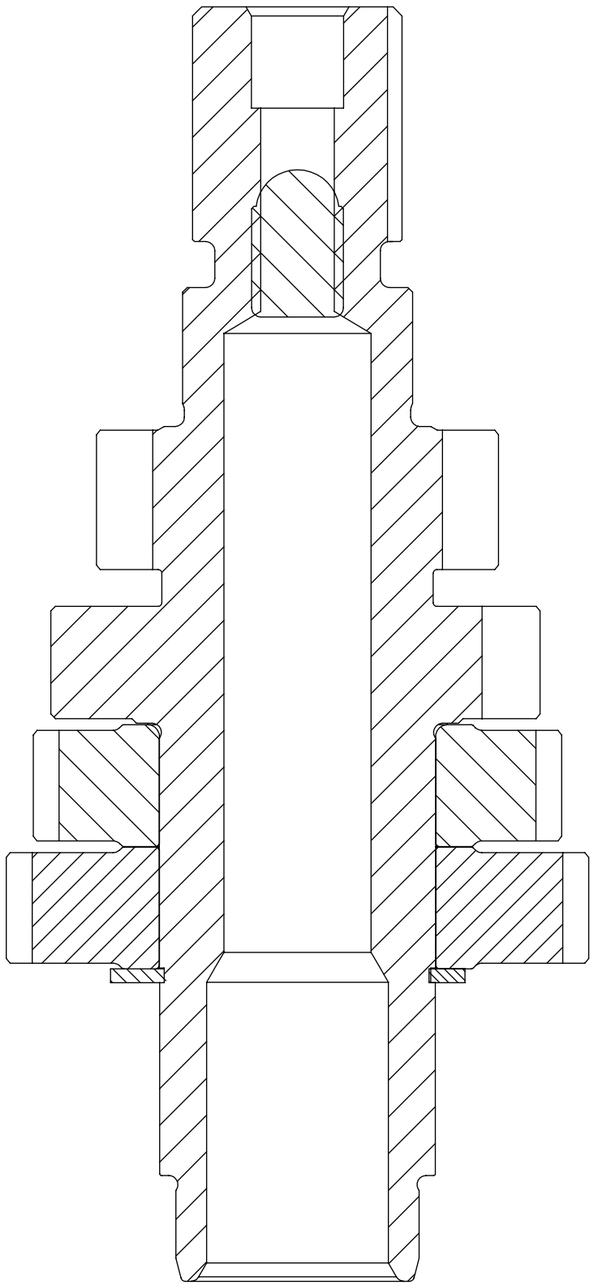

Section View

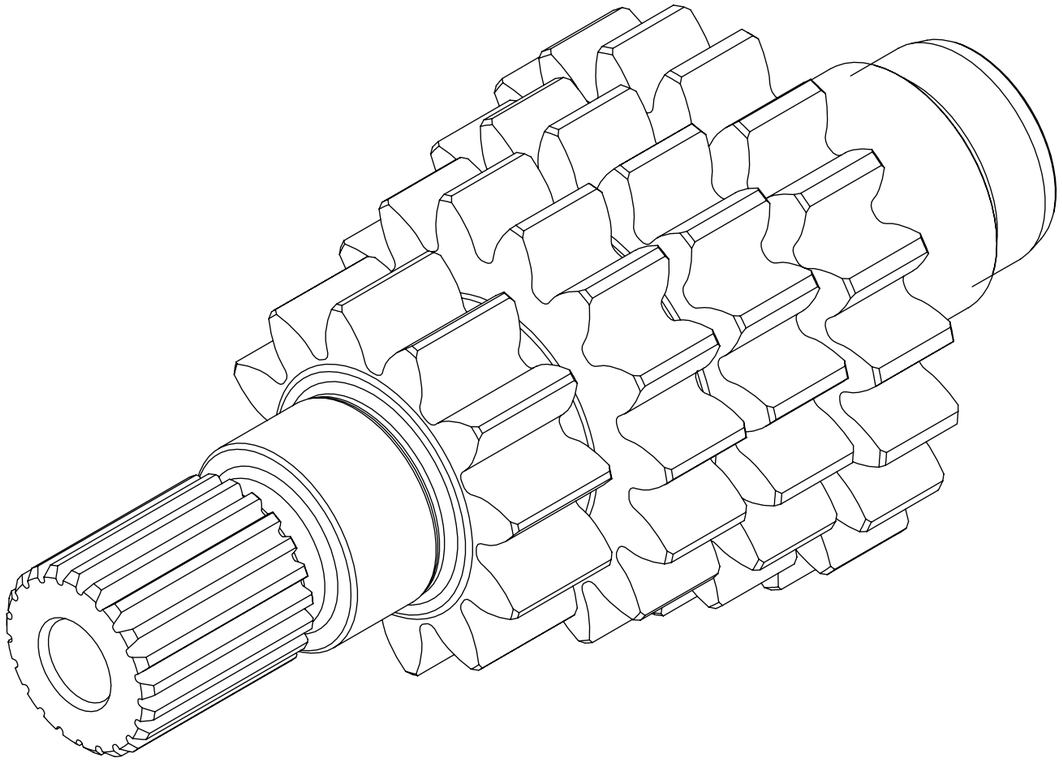

Assembled View

Assy. Number		34190601
Assy. Description		Layshaft, 8-20, assembly
Date	2011-07-14	TRACTIVE
Revision	01	
Drawn	KRT	Gjutargatan 54 S-781 70 Borlänge Tel +46 243 22 11 55 Fax +46 243 22 11 80 www.tractive.se / www.pentruder.com
Approved		
Supercedes		

THIS DRAWING IS THE PROPERTY OF **Tractive AB**. ITS SUBMISSION DOES NOT INCLUDE OR CARRY THE RIGHT TO MAKE, USE OR SELL WHAT IS ILLUSTRATED WITHOUT THE WRITTEN CONSENT OF **Tractive AB**.

Scale	1.5:1	
Drawing Size	A3	SHEET 2 OF 2

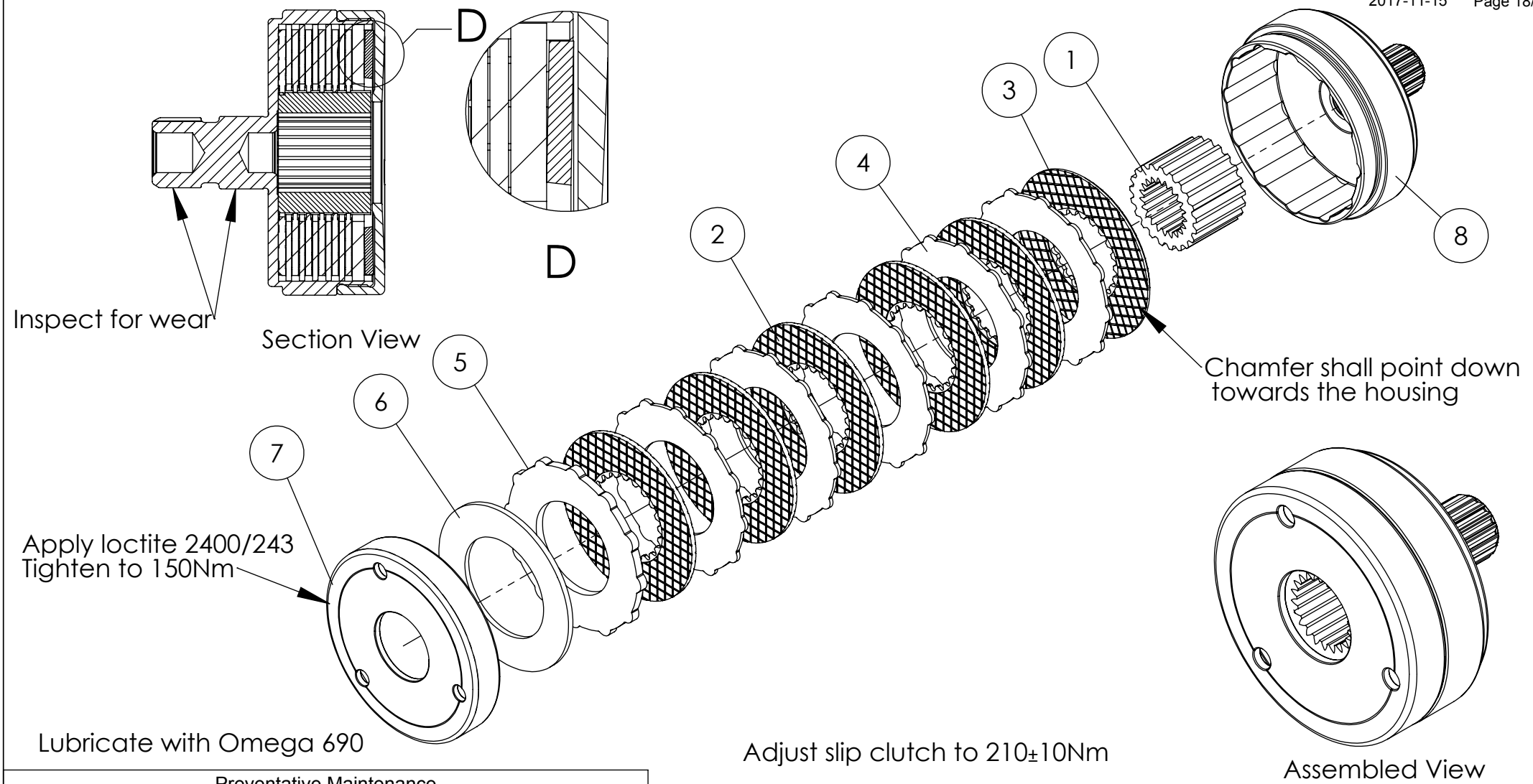

Preventative Maintenance				
ITEM NO.	PART/ASSY NUMBER	DESCRIPTION	QTY.	
1	26140100	Spline sleeve, HF slip clutch	1	
2	27040500	Friction disc, HF-clutch	5	I
3	27040500-F	Friction disc, chamfered	1	I
4	270503-1.500	Mating steel disc, T=1.5	5	I
5	270503-3.300	Mating steel disc, T=3.3	1	
6	3267541225	Belleville washer slip clutch	1	X
7	46480300	Pressure plate, HF slip clutch	1	
8	57510200	Housing, slip clutch	1	I
I=Inspect X=Replace				

Assy. Number	57510201	
Assy. Description	Slip clutch CBK/8-20HF/iQ Ver2 cpl	
Date	2010-11-15	TRACTIVE
Revision	--08	
Drawn	AJ	Gjutargatan 54 S-781 70 Borlänge Tel +46 243 22 11 55 Fax +46 243 22 11 80 www.tractive.se / www.pentruder.com
Approved		
Supercedes		
Scale	1:2	
Drawing Size	A3	SHEET 4 OF 6

THIS DRAWING IS THE PROPERTY OF **Tractive AB**. ITS SUBMISSION DOES NOT INCLUDE OR CARRY THE RIGHT TO MAKE, USE OR SELL WHAT IS ILLUSTRATED WITHOUT THE WRITTEN CONSENT OF **Tractive AB**.

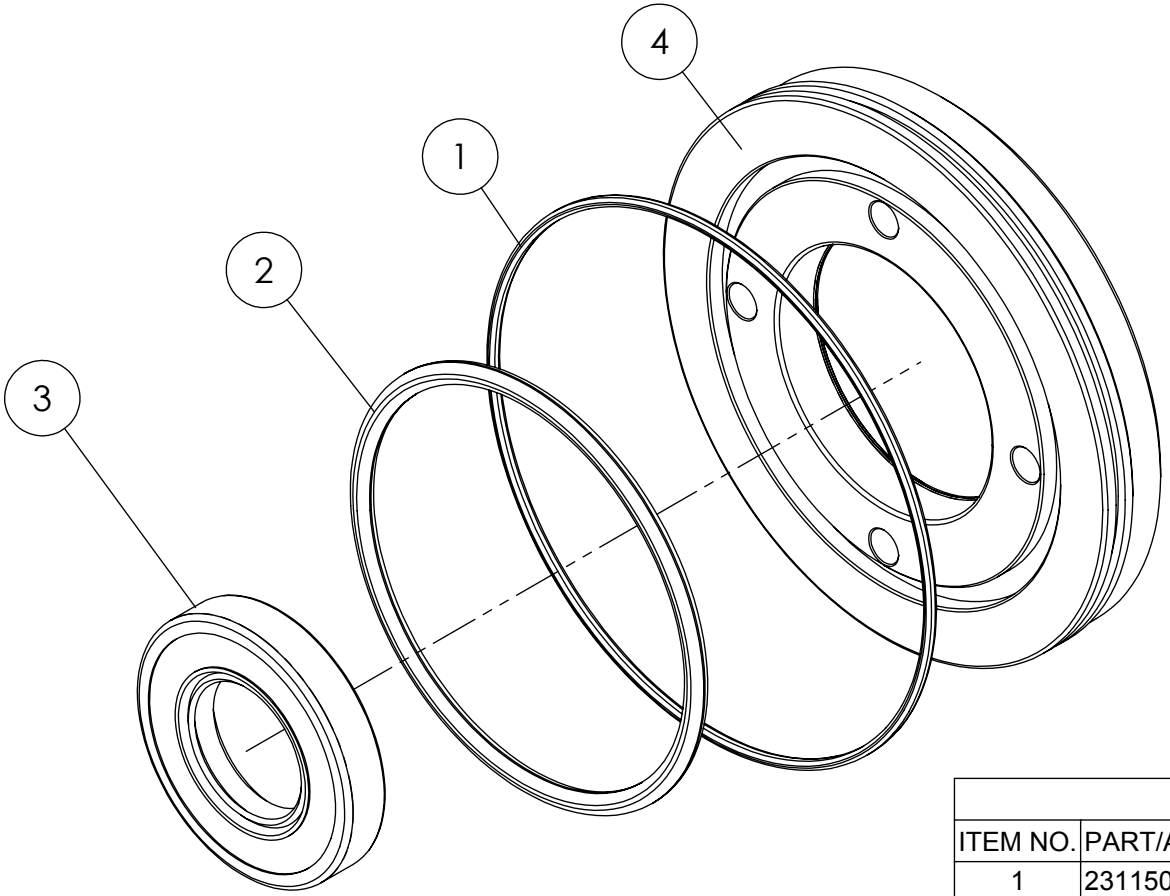

Preventative Maintenance					
ITEM NO.	PART/ASSY NUMBER	DESCRIPTION	QTY.	80h	160h
1	23115075	O-Ring 75 x 1.5mm	1		X
2	23130059	O-ring 59 x 3 NBR 70	1		I
3	24002004007	Radial seal 20 x 40 x 7 W. dust lip	1		X
4	58450200	Cover, slip clutch	1		
I=Inspect X=Replace					

Assy. Number		A5800007
Assy. Description		Slip Clutch Cover Assembly
Date	2011-07-13	TRACTIVE
Revision	01	
Drawn	KRT	Gjutargatan 54 S-781 70 Borlänge Tel +46 243 22 11 55 Fax +46 243 22 11 80 www.tractive.se / www.pentruder.com
Approved		
Supercedes		

THIS DRAWING IS THE PROPERTY OF **Tractive AB**. ITS SUBMISSION DOES NOT INCLUDE OR CARRY THE RIGHT TO MAKE, USE OR SELL WHAT IS ILLUSTRATED WITHOUT THE WRITTEN CONSENT OF **Tractive AB**.

Scale	1:1	
Drawing Size	A3	SHEET 3 OF 3

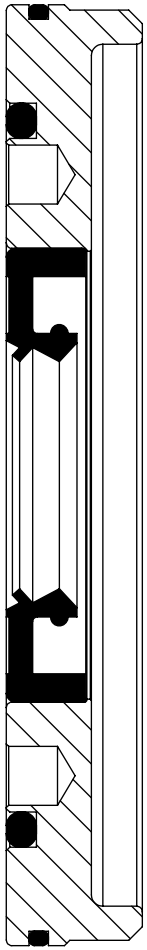

Section View

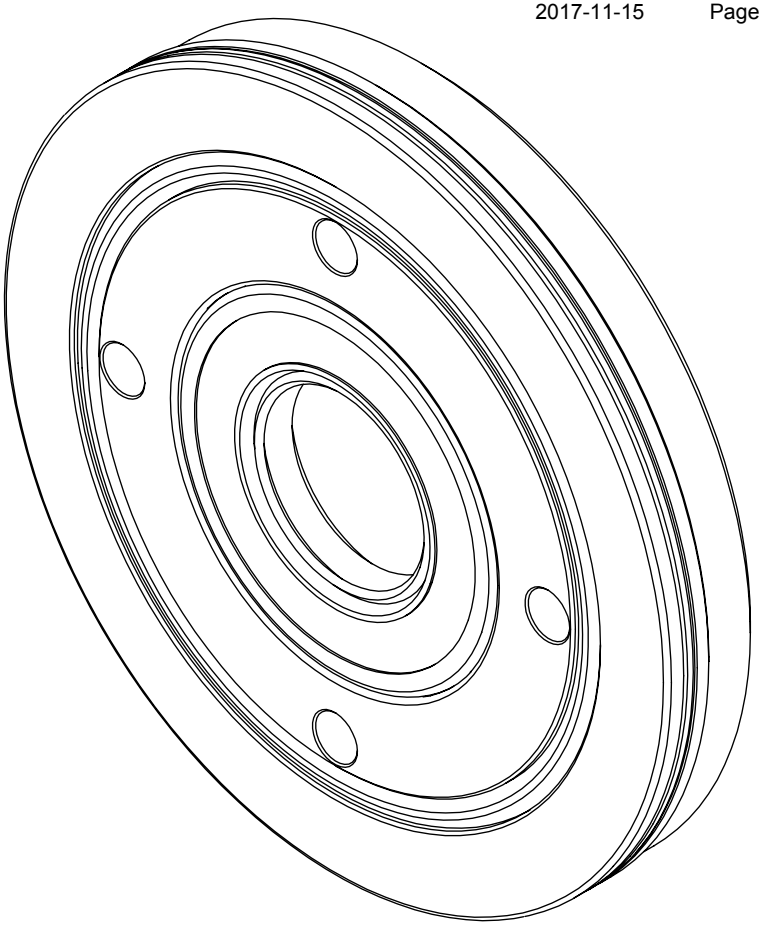

Assembled View

Assy. Number		A5800007
Assy. Description		Slip Clutch Cover Assembly
Date	2011-07-13	TRACTIVE
Revision	01	
Drawn	KRT	Gjutargatan 54 S-781 70 Borlänge Tel +46 243 22 11 55 Fax +46 243 22 11 80 www.tractive.se / www.pentruder.com
Approved		
Supercedes		

THIS DRAWING IS THE PROPERTY OF **Tractive AB**. ITS SUBMISSION DOES NOT INCLUDE OR CARRY THE RIGHT TO MAKE, USE OR SELL WHAT IS ILLUSTRATED WITHOUT THE WRITTEN CONSENT OF **Tractive AB**.

Scale	1.5:1	
Drawing Size	A3	SHEET 2 OF 3

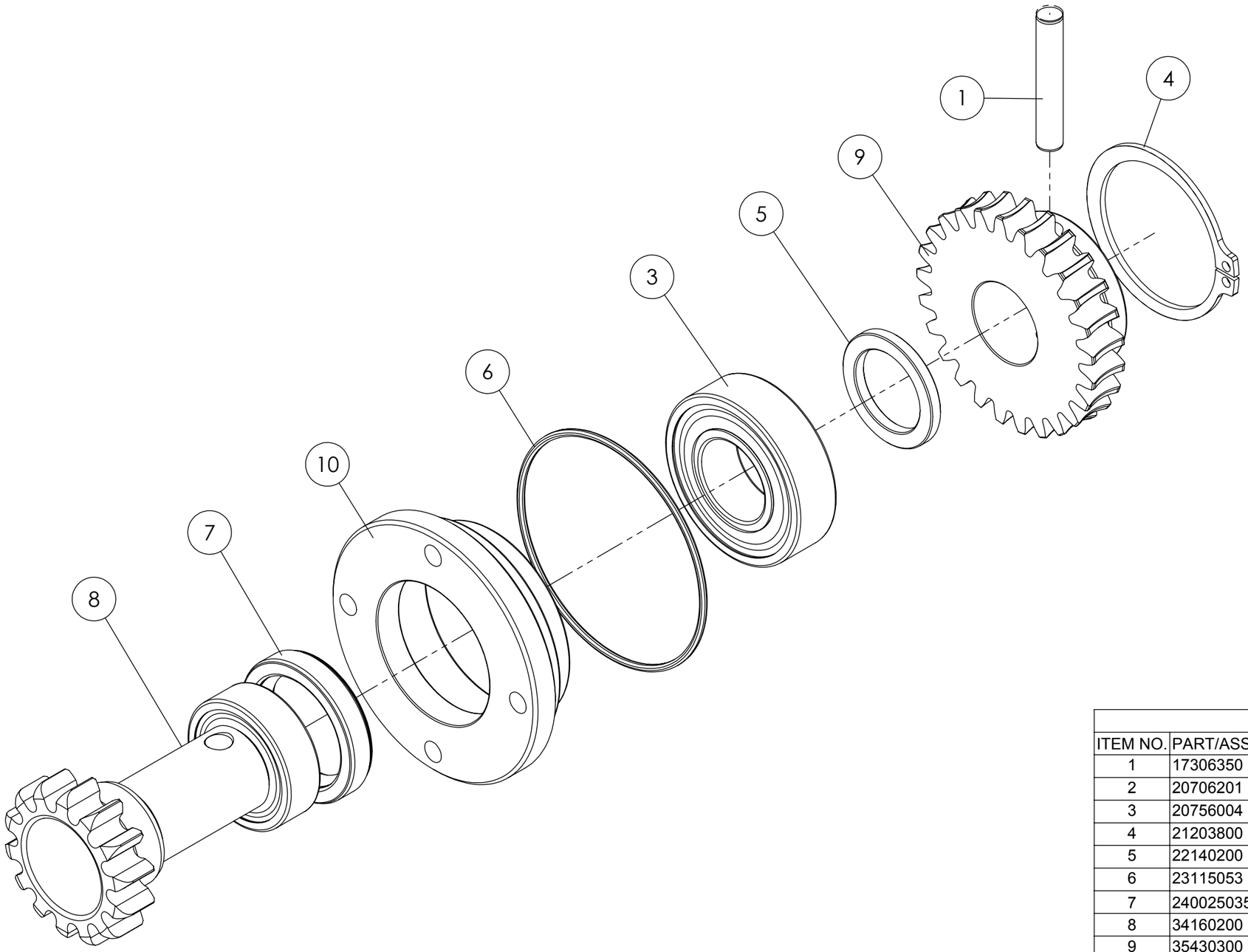

Preventative Maintenance					
ITEM NO.	PART/ASSY NUMBER	DESCRIPTION	QTY.	80h	160h
1	17306350	Cyl. Pin, CPK 6m6 x 35	1		
2	20706201	Radial support 6201-2Z/C3	1		
3	20756004	Ball Bearing 6004-2RSH/C3	1		I
4	21203800	Circlip Sga 38 DIN 471	1		
5	22140200	Spacer, travel pinion	1		
6	23115053	O-ring 53 x 1.5 NBR 70	1		X
7	24002503507	Radial seal 25 x 35 x 7	1		X
8	34160200	Pinion, travel, 14T	1		I
9	35430300	Worm gear, with shear pin, D=6	1		
10	58250200	Cover, travel	1		
I=Inspect X=Replace					

Assy. Number	34160201
Assy. Description	Travel pinion, assembly
Date	2011-07-11
Revision	--06
Drawn	KRT
Approved	AJ
Supercedes	

TRACTIVE

Gjutargatan 54 S-781 70 Borlänge
Tel +46 243 22 11 55
Fax +46 243 22 11 80
www.tractive.se / www.pentruder.com

THIS DRAWING IS THE PROPERTY OF **Tractive AB**. ITS SUBMISSION DOES NOT INCLUDE OR CARRY THE RIGHT TO MAKE, USE OR SELL WHAT IS ILLUSTRATED WITHOUT THE WRITTEN CONSENT OF **Tractive AB**.

Scale	1:1	
Drawing Size	A3	SHEET 3 OF 3

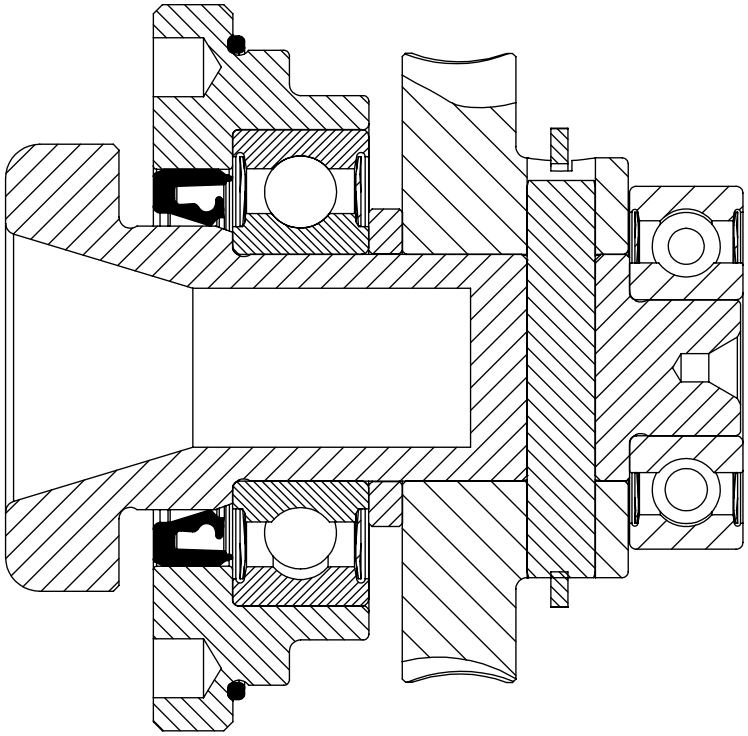

Section View

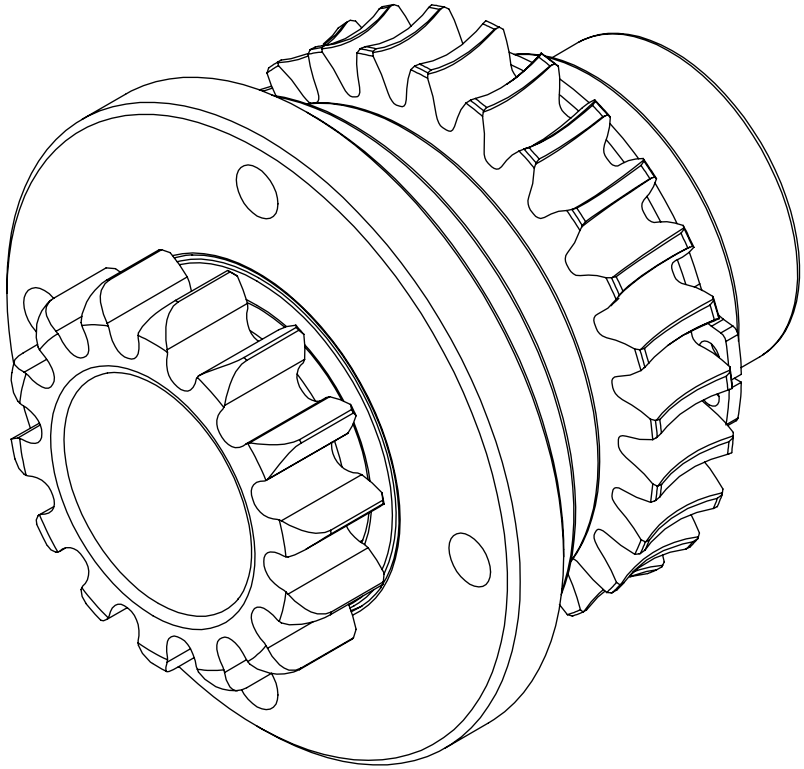

Assembled View

Assy. Number		34160201
Assy. Description		Travel pinion, assembly
Date	2011-07-11	TRACTIVE
Revision	--06	
Drawn	KRT	Gjutargatan 54 S-781 70 Borlänge Tel +46 243 22 11 55 Fax +46 243 22 11 80 www.tractive.se / www.pentruder.com
Approved	AJ	
Supercedes		

THIS DRAWING IS THE PROPERTY OF **Tractive AB**. ITS SUBMISSION DOES NOT INCLUDE OR CARRY THE RIGHT TO MAKE, USE OR SELL WHAT IS ILLUSTRATED WITHOUT THE WRITTEN CONSENT OF **Tractive AB**.

Scale	1.5:1	
Drawing Size	A3	SHEET 2 OF 3

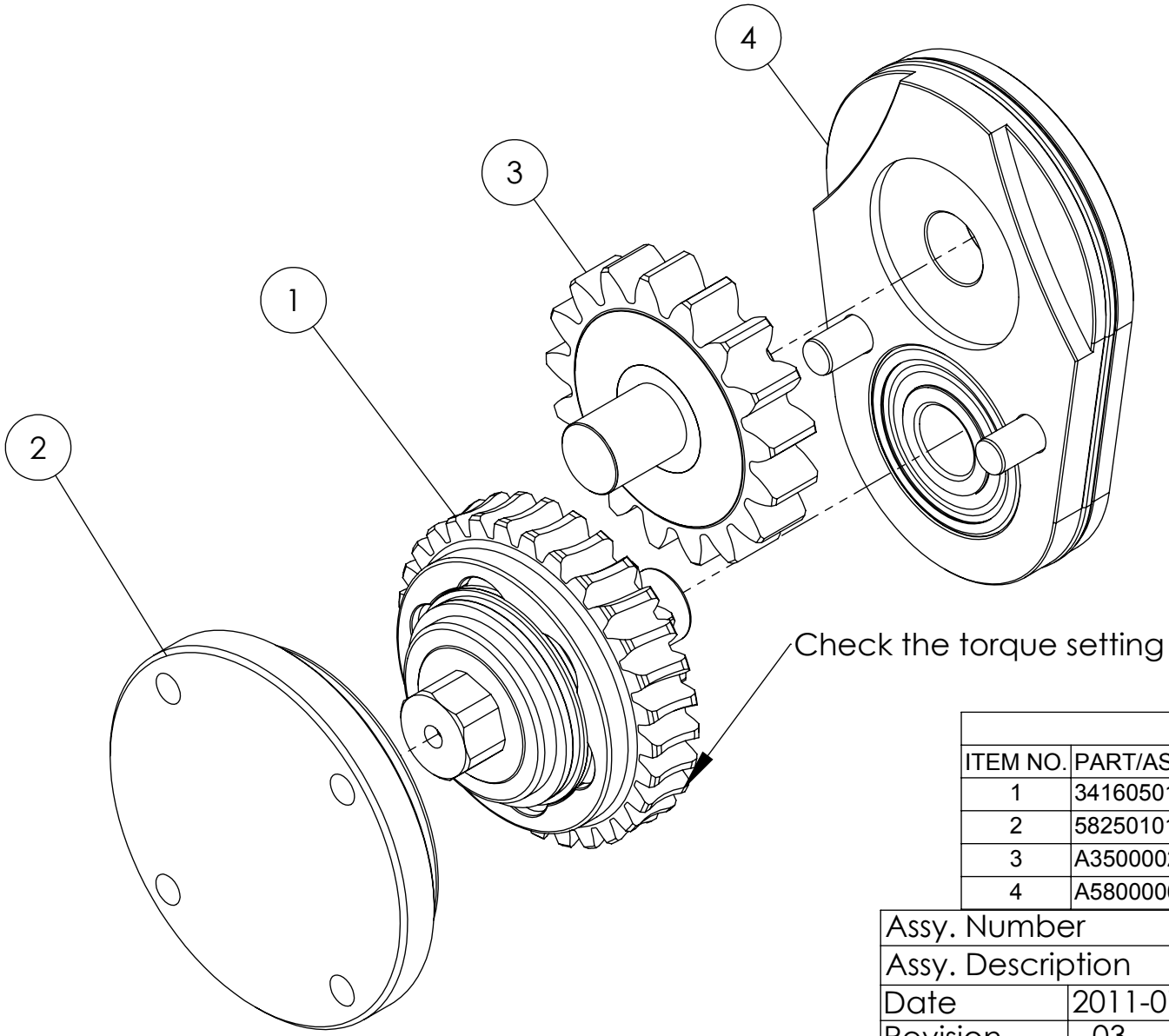

Preventative Maintenance					
ITEM NO.	PART/ASSY NUMBER	DESCRIPTION	QTY.	80h	160h
1	34160501	Slip clutch arm, assembly	1	I	I
2	58250101	Cover arm rotation Pentruder cpl	1		
3	A3500002	Assembly, Intermediate gear armrot.	1		
4	A5800006	Cover, oval 6-16_8-20 assy	1		

Assy. Number		A5800005
Assy. Description		Gear Drive Assembly, Arm Rotation
Date	2011-07-12	TRACTIVE
Revision	--03	
Drawn	KRT	Gjutargatan 54 S-781 70 Borlänge Tel +46 243 22 11 55 Fax +46 243 22 11 80 www.tractive.se / www.pentruder.com
Approved	AJ	
Supercedes		

THIS DRAWING IS THE PROPERTY OF **Tractive AB**. ITS SUBMISSION DOES NOT INCLUDE OR CARRY THE RIGHT TO MAKE, USE OR SELL WHAT IS ILLUSTRATED WITHOUT THE WRITTEN CONSENT OF **Tractive AB**.

Scale	1:1	
Drawing Size	A3	SHEET 3 OF 3

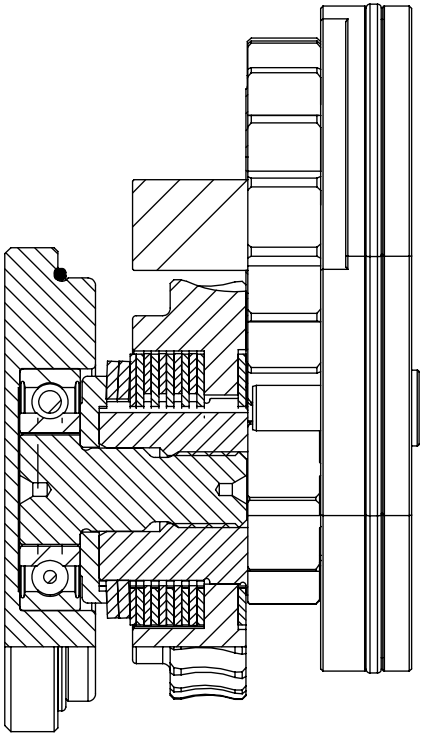

Section View

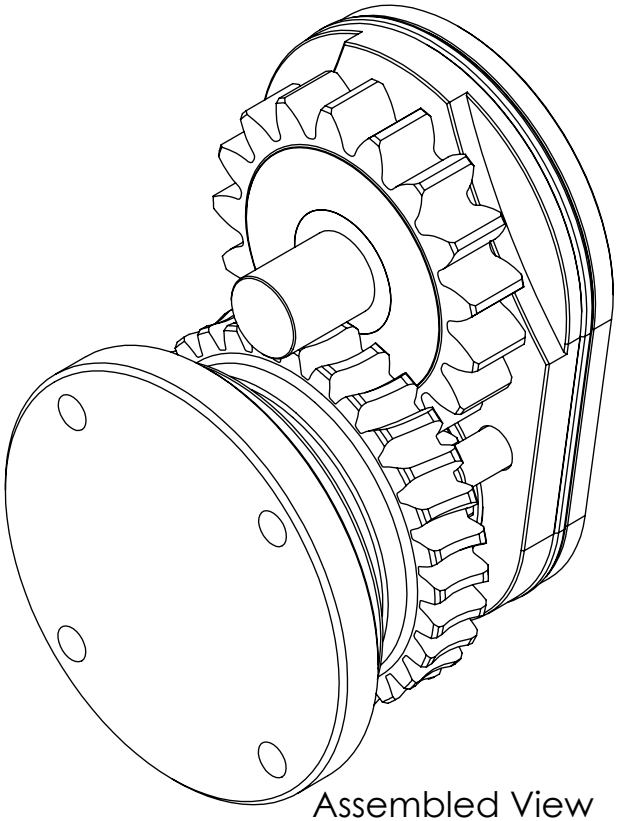

Assembled View

Assy. Number		A5800005
Assy. Description		Gear Drive Assembly, Arm Rotation
Date	2011-07-12	TRACTIVE
Revision	--02	
Drawn	KRT	Gjutargatan 54 S-781 70 Borlänge Tel +46 243 22 11 55 Fax +46 243 22 11 80 www.tractive.se / www.pentruder.com
Approved	AJ	
Supercedes		

THIS DRAWING IS THE PROPERTY OF **Tractive AB**. ITS SUBMISSION DOES NOT INCLUDE OR CARRY THE RIGHT TO MAKE, USE OR SELL WHAT IS ILLUSTRATED WITHOUT THE WRITTEN CONSENT OF **Tractive AB**.

Scale	1:1	
Drawing Size	A3	SHEET 2 OF 2

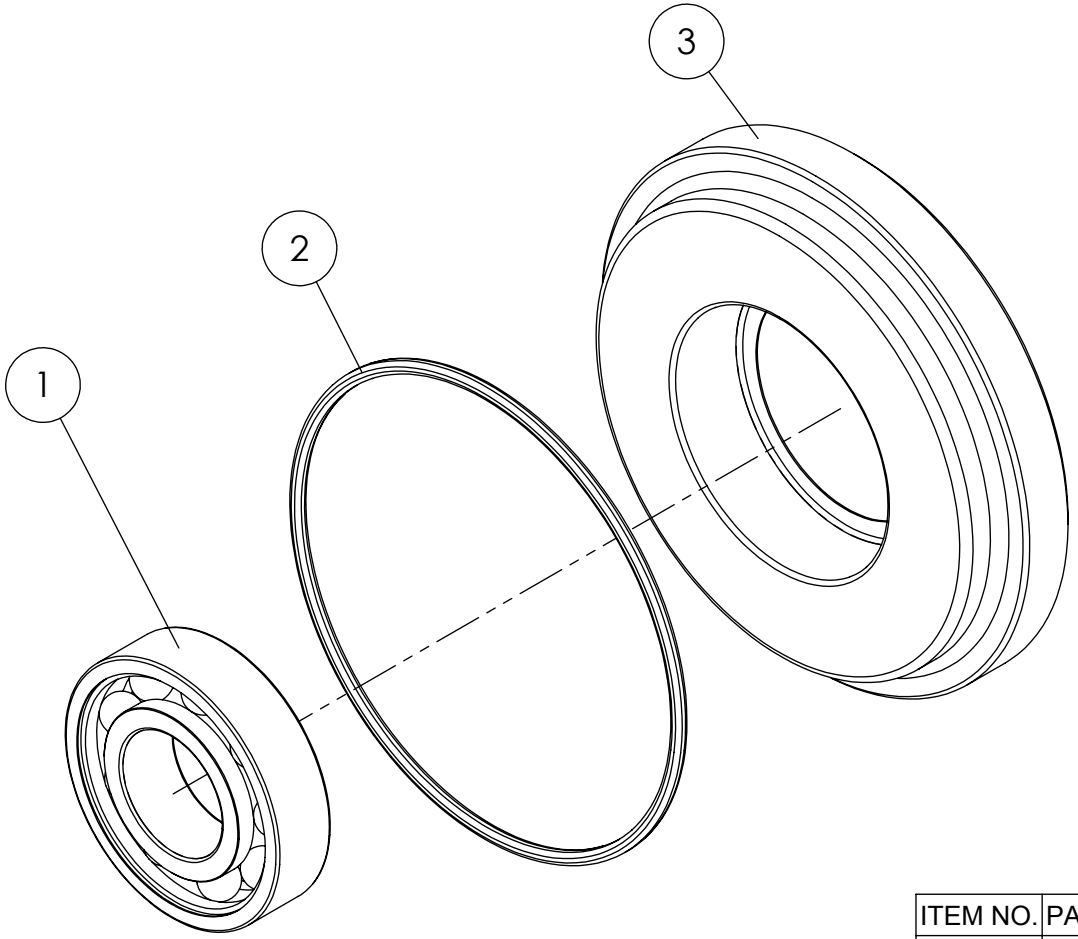

ITEM NO.	PART NUMBER	DESCRIPTION	QTY.
1	207016002	Ball bearing 16002	1
2	23115053	O-ring 53 x 1.5 NBR 70	1
3	58250100	Cover, arm rotation	1

Assy. Number		58250101
Assy. Description		Cover arm rotation Pentruder cpl
Date	2011-07-12	TRACTIVE
Revision	--02	
Drawn	KRT	Gjutargatan 54 S-781 70 Borlänge Tel +46 243 22 11 55 Fax +46 243 22 11 80 www.tractive.se / www.pentruder.com
Approved	AJ	
Supercedes		

THIS DRAWING IS THE PROPERTY OF **Tractive AB**. ITS SUBMISSION DOES NOT INCLUDE OR CARRY THE RIGHT TO MAKE, USE OR SELL WHAT IS ILLUSTRATED WITHOUT THE WRITTEN CONSENT OF **Tractive AB**.

Scale	1.25:1	
Drawing Size	A3	SHEET 1 OF 2

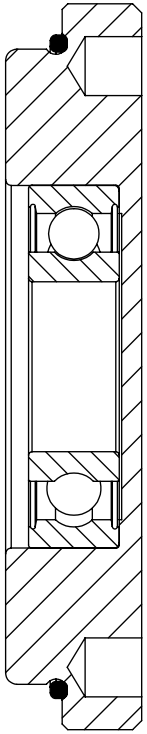

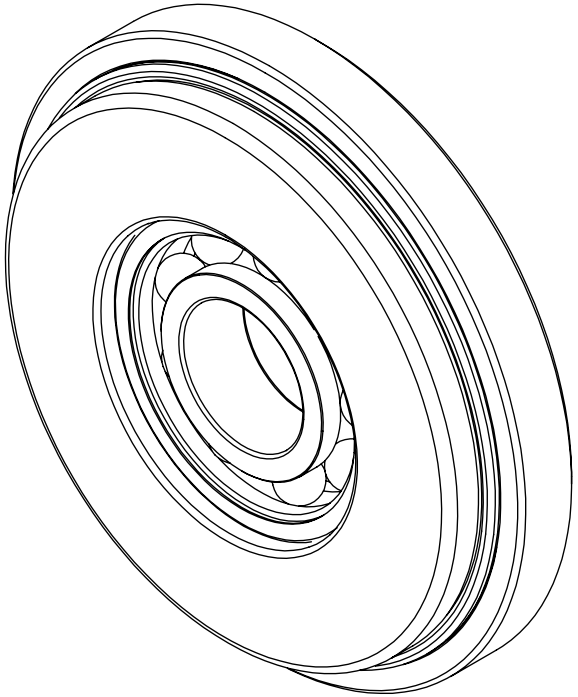

Assembled View

Assy. Number		58250101
Assy. Description		Cover arm rotation Pentruder cpl
Date	2011-07-12	TRACTIVE
Revision	--02	
Drawn	KRT	Gjutargatan 54 S-781 70 Borlänge Tel +46 243 22 11 55 Fax +46 243 22 11 80 www.tractive.se / www.pentruder.com
Approved	AJ	
Supercedes		

THIS DRAWING IS THE PROPERTY OF **Tractive AB**. ITS SUBMISSION DOES NOT INCLUDE OR CARRY THE RIGHT TO MAKE, USE OR SELL WHAT IS ILLUSTRATED WITHOUT THE WRITTEN CONSENT OF **Tractive AB**.

Scale	1.5:1	
Drawing Size	A3	SHEET 2 OF 2

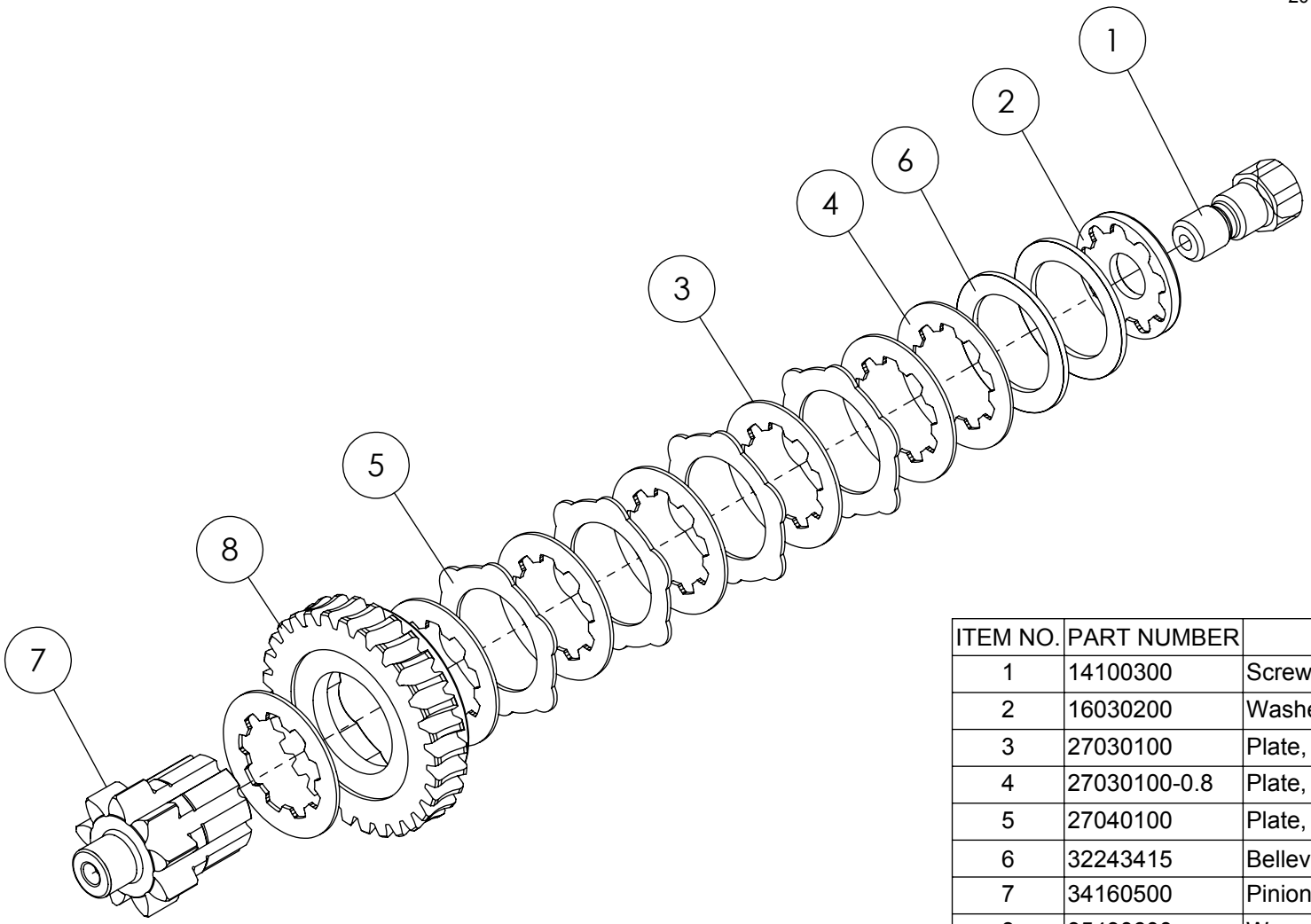

ITEM NO.	PART NUMBER	DESCRIPTION	QTY.
1	14100300	Screw, slip clutch	1
2	16030200	Washer, slip clutch	1
3	27030100	Plate, slip clutch, inner teeth	6
4	27030100-0.8	Plate, slip-clutch, inner teeth T=0.8	1
5	27040100	Plate, slip clutch, outer teeth	4
6	32243415	Belleville washer 34 x 24 x 1.5	2
7	34160500	Pinion, slip clutch	1
8	35430600	Worm gear, slip clutch	1

Assy. Number		34160501
Assy. Description		Slip clutch arm, assembly
Date	2011-07-12	TRACTIVE
Revision	--02	
Drawn	KRT	Gjutargatan 54 S-781 70 Borlänge Tel +46 243 22 11 55 Fax +46 243 22 11 80 www.tractive.se / www.pentruder.com
Approved	AJ	
Supercedes		

THIS DRAWING IS THE PROPERTY OF **Tractive AB**. ITS SUBMISSION DOES NOT INCLUDE OR CARRY THE RIGHT TO MAKE, USE OR SELL WHAT IS ILLUSTRATED WITHOUT THE WRITTEN CONSENT OF **Tractive AB**.

Scale	1:1.5	
Drawing Size	A3	SHEET 1 OF 2

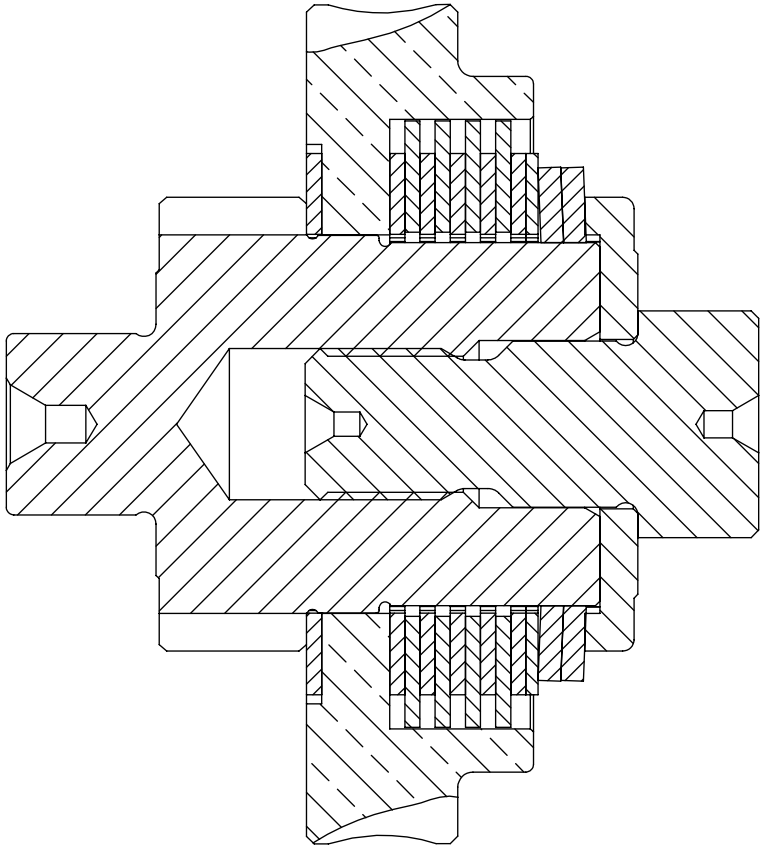

Section View

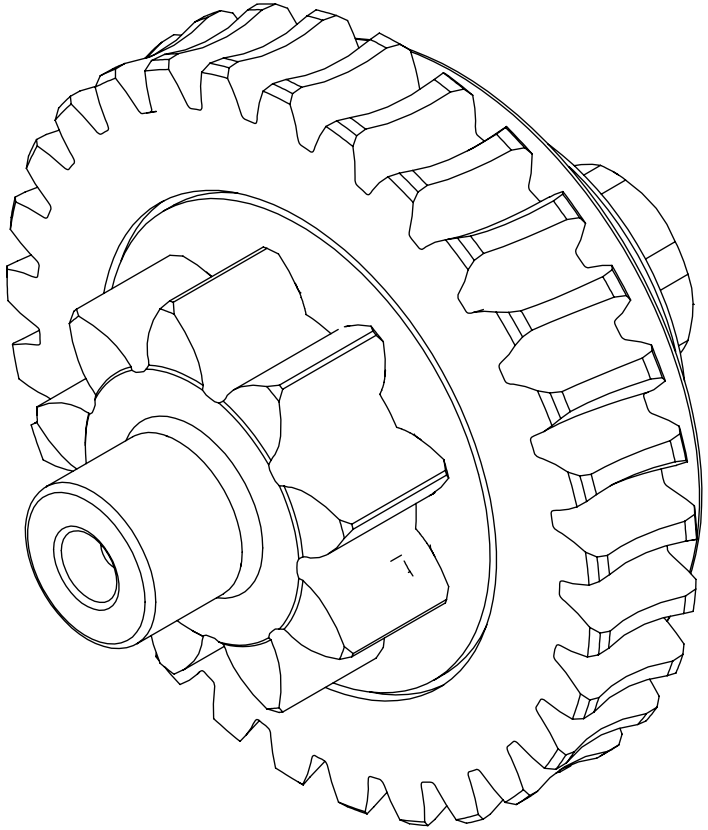

Assembled View

Assy. Number		34160501	
Assy. Description		Slip clutch arm, assembly	
Date	2011-07-12	TRACTIVE	
Revision	01		
Drawn	KRT	Gjutargatan 54 S-781 70 Borlänge Tel +46 243 22 11 55 Fax +46 243 22 11 80 www.tractive.se / www.pentruder.com	
Approved	AJ		
Supercedes			
THIS DRAWING IS THE PROPERTY OF **Tractive AB**. ITS SUBMISSION DOES NOT INCLUDE OR CARRY THE RIGHT TO MAKE, USE OR SELL WHAT IS ILLUSTRATED WITHOUT THE WRITTEN CONSENT OF **Tractive AB**.		Scale	2:1
		Drawing Size	A3	SHEET 2 OF 2

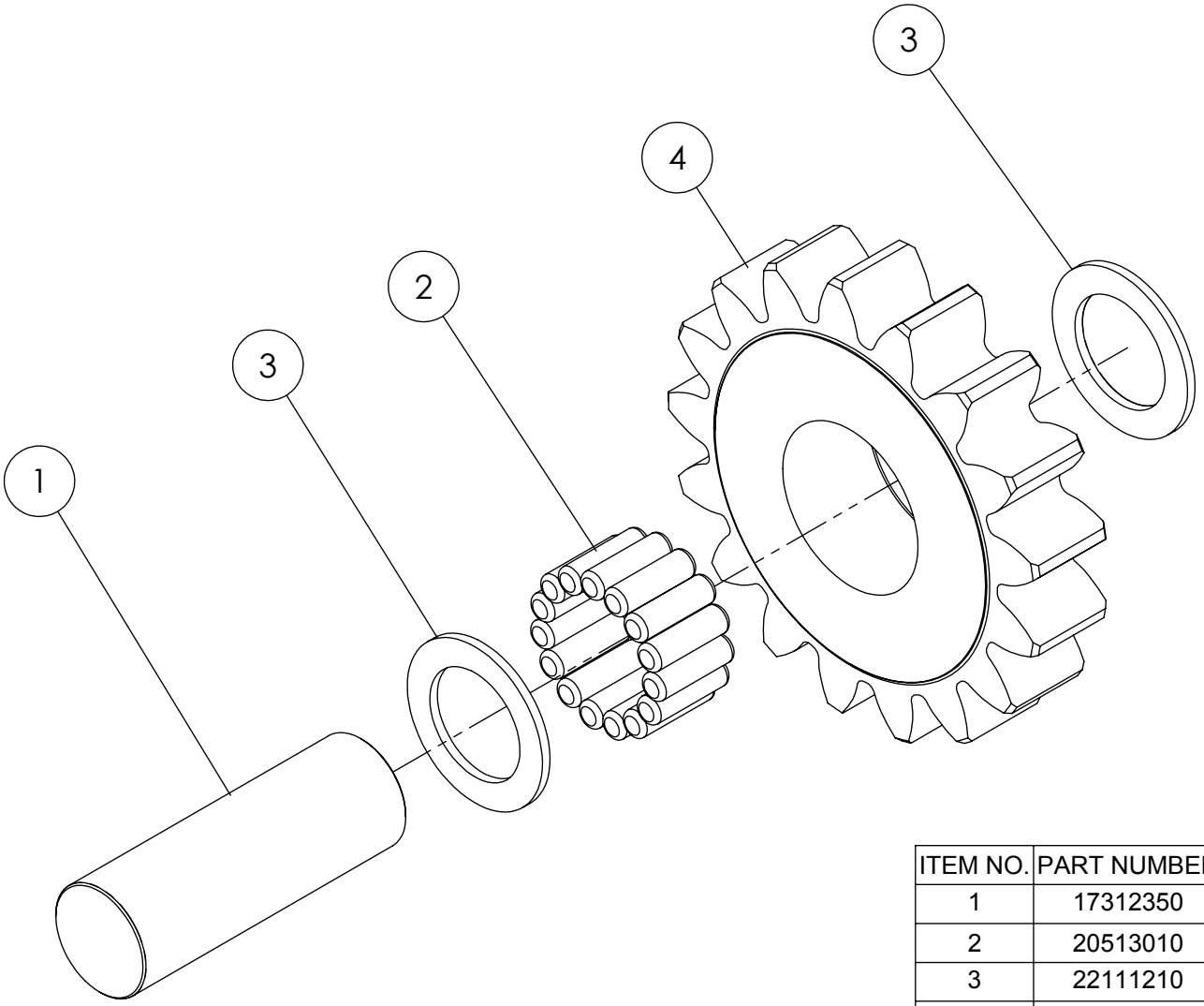

ITEM NO.	PART NUMBER	DESCRIPTION	QTY.
1	17312350	Cylindrical pin Ø12 x 35	1
2	20513010	Needle roller 3 x 9.8	15
3	22111210	Support ring 12 x 18 x 1	2
4	35370100	Intermediate gear armrot. 6-16/8-20	1

Assy. Number		A3500002
Assy. Description		Assembly, Intermediate gear armrot.
Date	2011-07-13	TRACTIVE
Revision	--04	
Drawn	KRT	Gjutargatan 54 S-781 70 Borlänge Tel +46 243 22 11 55 Fax +46 243 22 11 80 www.tractive.se / www.pentruder.com
Approved	AJ	
Supercedes		

THIS DRAWING IS THE PROPERTY OF **Tractive AB**. ITS SUBMISSION DOES NOT INCLUDE OR CARRY THE RIGHT TO MAKE, USE OR SELL WHAT IS ILLUSTRATED WITHOUT THE WRITTEN CONSENT OF **Tractive AB**.

Scale	1.5:1	
Drawing Size	A3	SHEET 1 OF 2

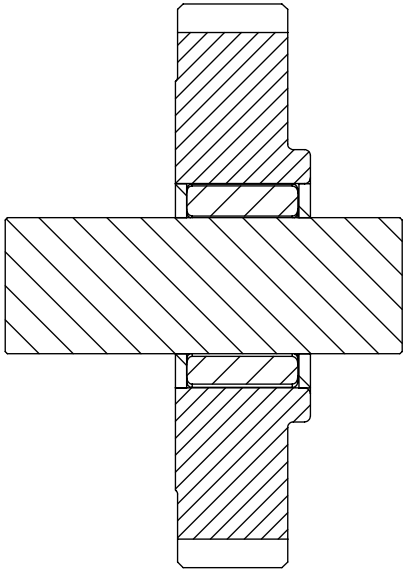

Section View

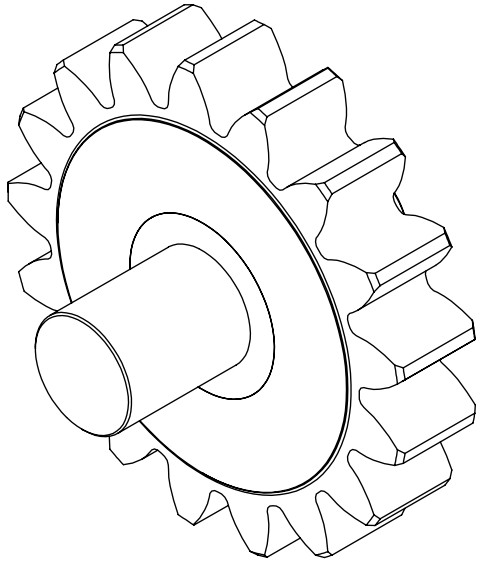

Assembled View

Assy. Number		A3500002
Assy. Description		Assembly, Intermediate gear armrot.
Date	2011-07-13	TRACTIVE
Revision	01	
Drawn	KRT	Gjutargatan 54 S-781 70 Borlänge Tel +46 243 22 11 55 Fax +46 243 22 11 80 www.tractive.se / www.pentruder.com
Approved	AJ	
Supercedes		

THIS DRAWING IS THE PROPERTY OF **Tractive AB**. ITS SUBMISSION DOES NOT INCLUDE OR CARRY THE RIGHT TO MAKE, USE OR SELL WHAT IS ILLUSTRATED WITHOUT THE WRITTEN CONSENT OF **Tractive AB**.

Scale	1.5:1	
Drawing Size	A3	SHEET 2 OF 2

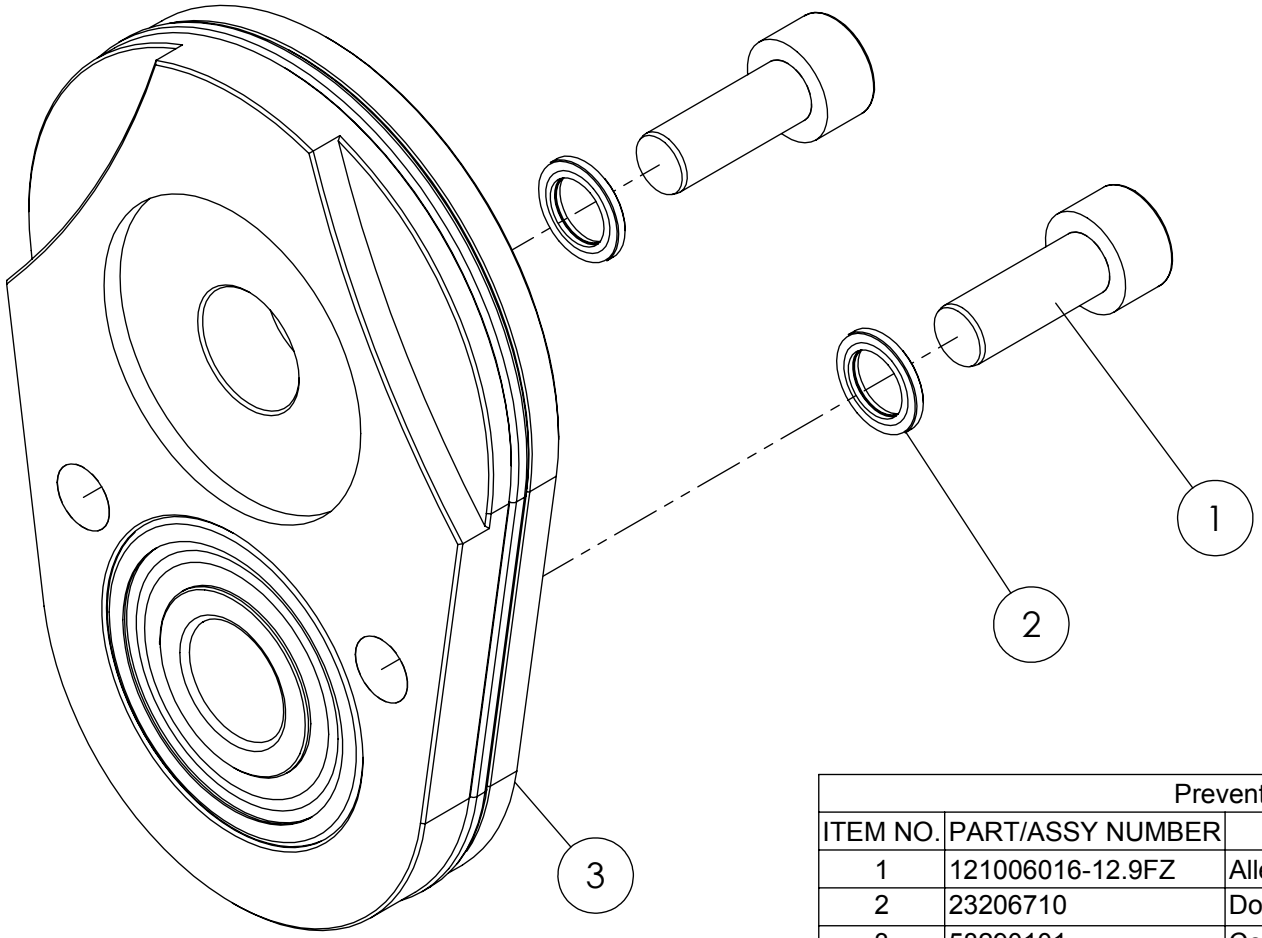

Preventative Maintenance					
ITEM NO.	PART/ASSY NUMBER	DESCRIPTION	QTY.	80h	160h
1	121006016-12.9FZ	Allen Screw DIN912 M6 x 16 12.9Z	2		
2	23206710	Dowty Washer 6.7 x 10 x 1 M6	2		X
3	58290101	Cover oval 6 -16, 8-20 cpl	1		
I=Inspect X=Replace					

Assy. Number		A5800006
Assy. Description		Cover, oval 6-16_8-20 assy
Date	2011-07-12	TRACTIVE
Revision	--04	
Drawn	KRT	Gjutargatan 54 S-781 70 Borlänge Tel +46 243 22 11 55 Fax +46 243 22 11 80 www.tractive.se / www.pentruder.com
Approved	AJ	
Supercedes		

THIS DRAWING IS THE PROPERTY OF **Tractive AB**. ITS SUBMISSION DOES NOT INCLUDE OR CARRY THE RIGHT TO MAKE, USE OR SELL WHAT IS ILLUSTRATED WITHOUT THE WRITTEN CONSENT OF **Tractive AB**.

Scale	1:1	
Drawing Size	A3	SHEET 3 OF 3

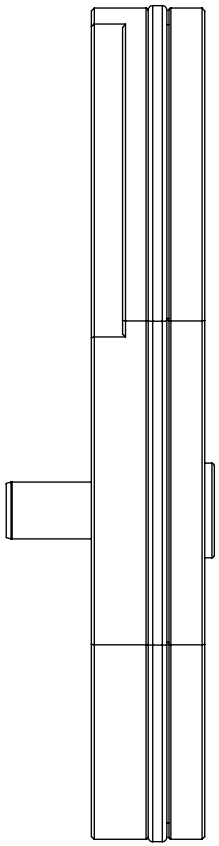

Section View

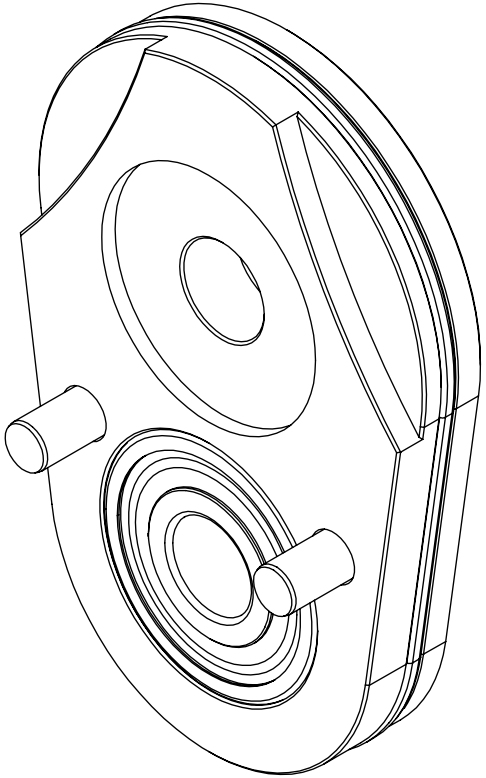

Assembled View

Assy. Number		A5800006
Assy. Description		Cover, oval 6-16_8-20 assy
Date	2011-07-12	TRACTIVE
Revision	--03	
Drawn	KRT	Gjutargatan 54 S-781 70 Borlänge Tel +46 243 22 11 55 Fax +46 243 22 11 80 www.tractive.se / www.pentruder.com
Approved	AJ	
Supercedes		

THIS DRAWING IS THE PROPERTY OF **Tractive AB**. ITS SUBMISSION DOES NOT INCLUDE OR CARRY THE RIGHT TO MAKE, USE OR SELL WHAT IS ILLUSTRATED WITHOUT THE WRITTEN CONSENT OF **Tractive AB**.

Scale	1.25:1	
Drawing Size	A3	SHEET 2 OF 2

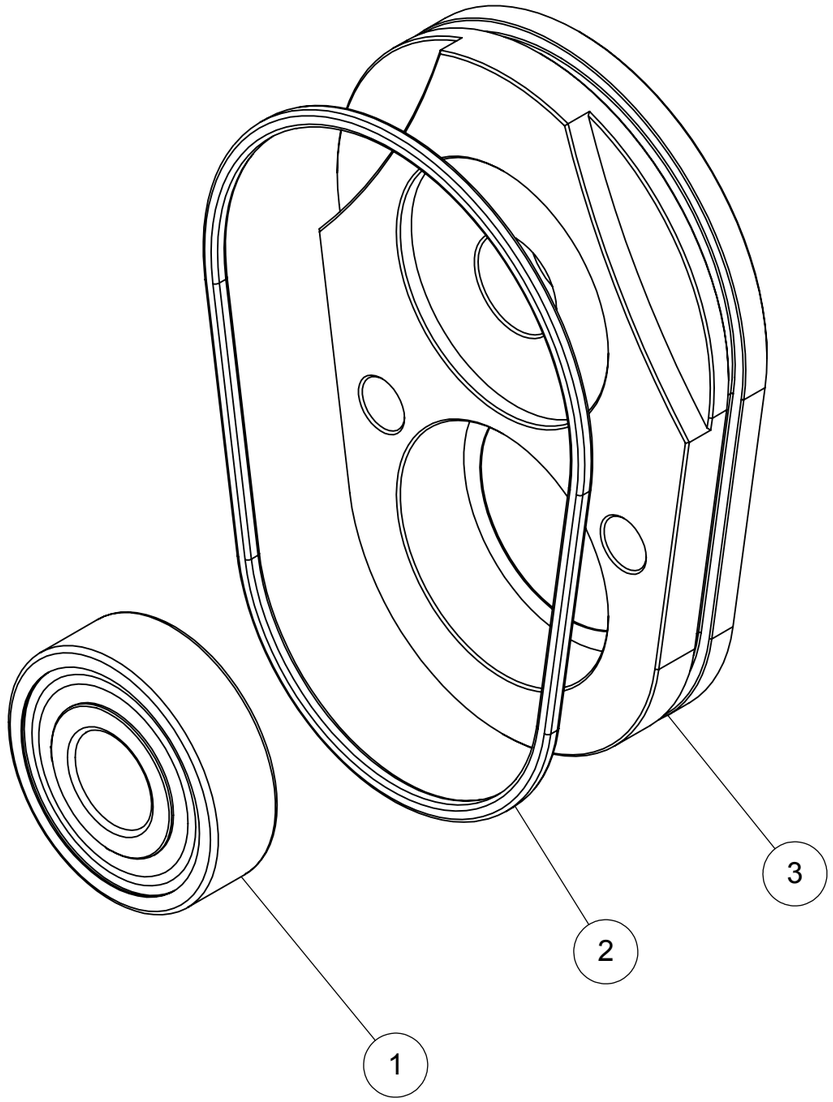

ITEM NO.	PART/ASSY NUMBER	DESCRIPTION	QTY.
1	20706201	Radial support 6201-2Z/C3	1
2	23120070	O-ring 70 x 2 NBR 70	1
3	58290100	Cover, oval	1

Suppliers Part Number	Supercedes	Date	Part Number **58290101**
Material Code	Material Dimension	Procurement	Description Cover oval 6 -16, 8-20 cpl
Material	Geometric Tolerance	Proj	
Derived From	Scale 1:1 / Mass $PRP@Mass	Sheet 1/1	
Drawn by / Approved by	Designed by		

THIS DRAWING IS THE PROPERTY OF Tractive AB. ITS SUBMISSION DOES NOT INCLUDE OR CARRY THE RIGHT TO MAKE, USE OR SELL WHAT IS ILLUSTRATED WITHOUT THE WRITTEN CONSENT OF Tractive AB.

Revision --00

TRACTIVE
Gjutargatan 54 S-781 70 Borlänge
Tel +46 243 22 11 55 Fax +46 243 22 11 80
www.tractive.se / www.pentruder.com

Dimensions in mm

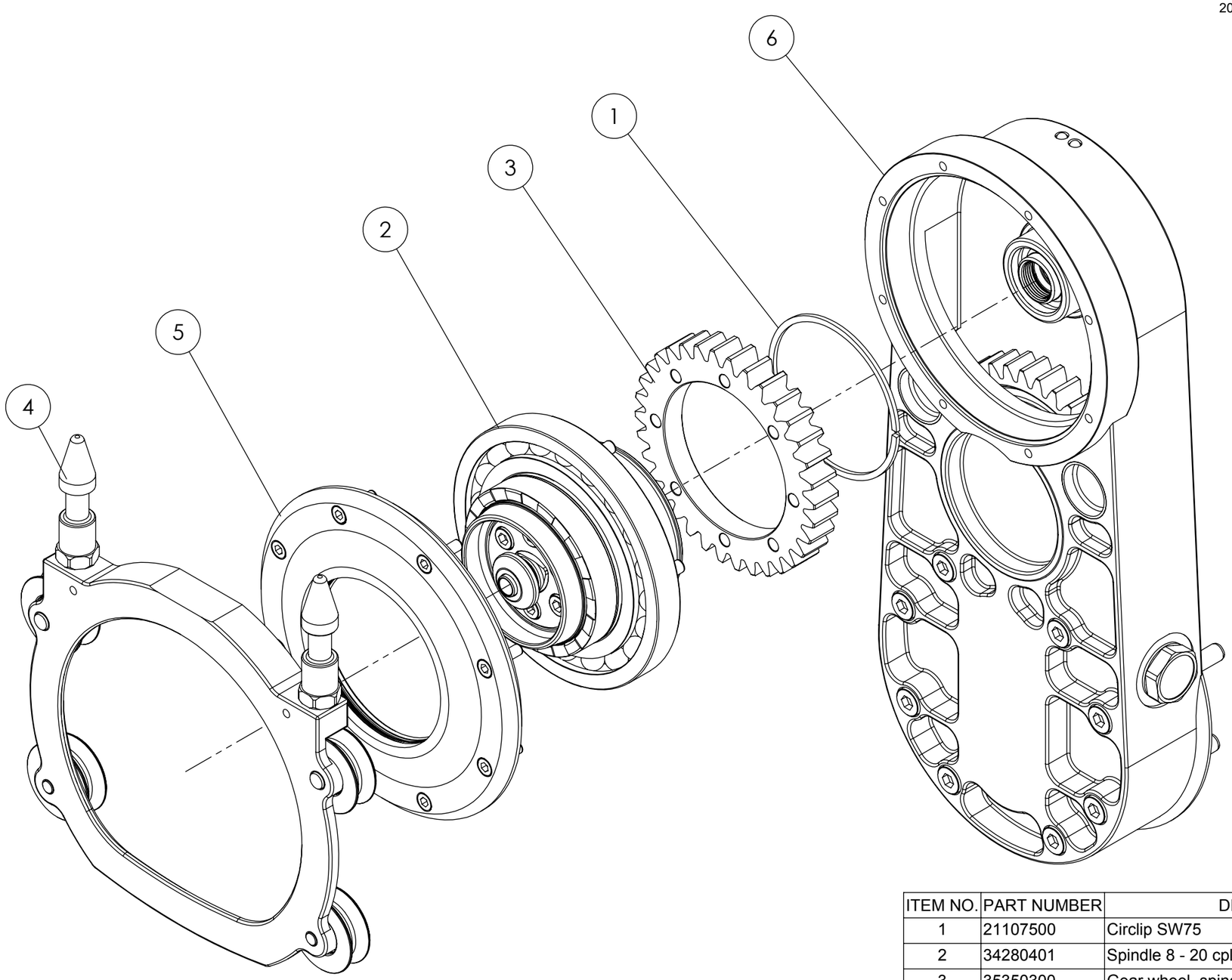

ITEM NO.	PART NUMBER	DESCRIPTION	QTY.
1	21107500	Circlip SW75	1
2	34280401	Spindle 8 - 20 cpl	1
3	35350300	Gear wheel, spindle, 8 - 20	1
4	A4200001	Blade guard rotary flange	1
5	A4200002	Flange Assembly, tapered, blade guard holder	1
6	A5600009	Arm Housing Assembly, 8-20HF	1

Assy. Number		A5600010
Assy. Description		Arm Assembly, 8-20HF
Date	2011-07-12	TRACTIVE
Revision	01	Gjutargatan 54 S-781 70 Borlänge Tel +46 243 22 11 55 Fax +46 243 22 11 80 www.tractive.se / www.pentruder.com
Drawn	KRT	
Approved		
Supercedes		

THIS DRAWING IS THE PROPERTY OF **Tractive AB**. ITS SUBMISSION DOES NOT INCLUDE OR CARRY THE RIGHT TO MAKE, USE OR SELL WHAT IS ILLUSTRATED WITHOUT THE WRITTEN CONSENT OF **Tractive AB**.

Scale	1:2	
Drawing Size	A3	SHEET 1 OF 2

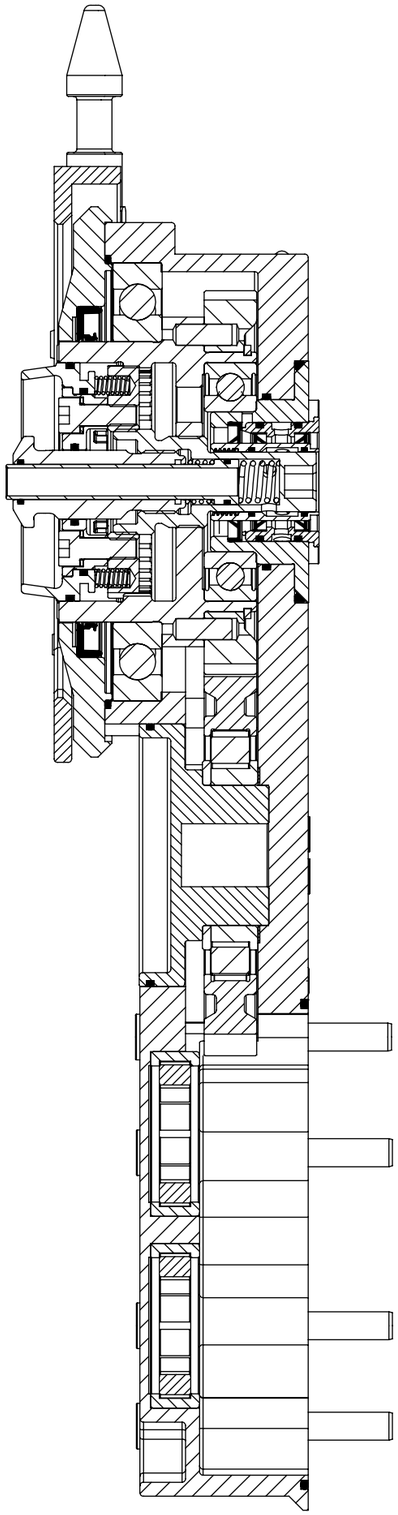

Section View

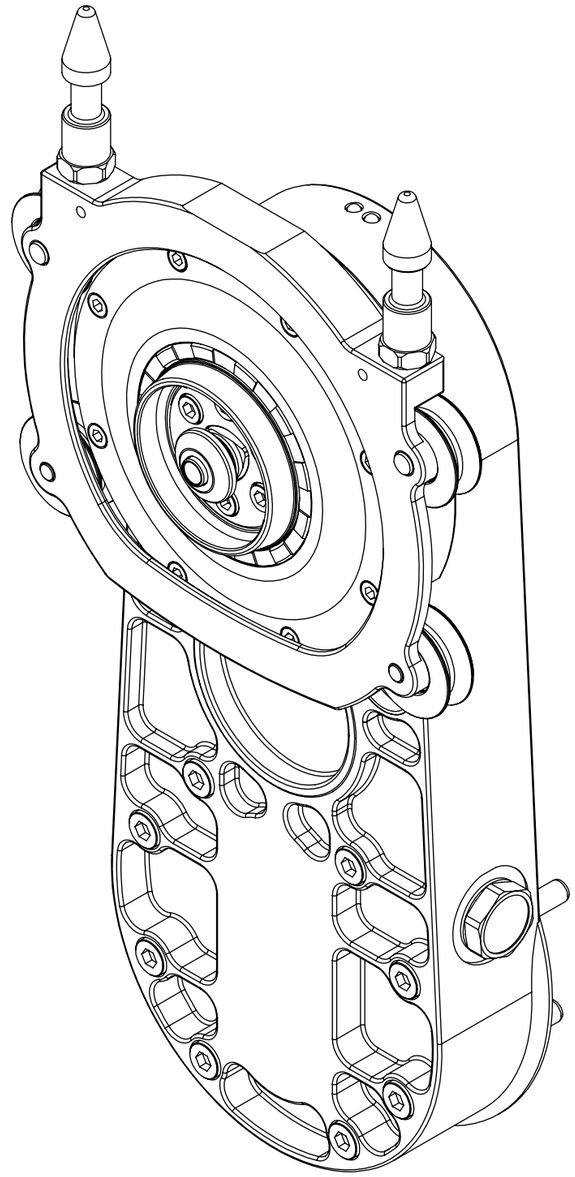

Assembled View

Assy. Number		A5600010
Assy. Description		Arm Assembly, 8-20HF
Date	2011-07-12	TRACTIVE
Revision	01	
Drawn	KRT	Gjutargatan 54 S-781 70 Borlänge Tel +46 243 22 11 55 Fax +46 243 22 11 80 www.tractive.se / www.pentruder.com
Approved		
Supercedes		

THIS DRAWING IS THE PROPERTY OF **Tractive AB**. ITS SUBMISSION DOES NOT INCLUDE OR CARRY THE RIGHT TO MAKE, USE OR SELL WHAT IS ILLUSTRATED WITHOUT THE WRITTEN CONSENT OF **Tractive AB**.

Scale	1:2	
Drawing Size	A3	SHEET 2 OF 2

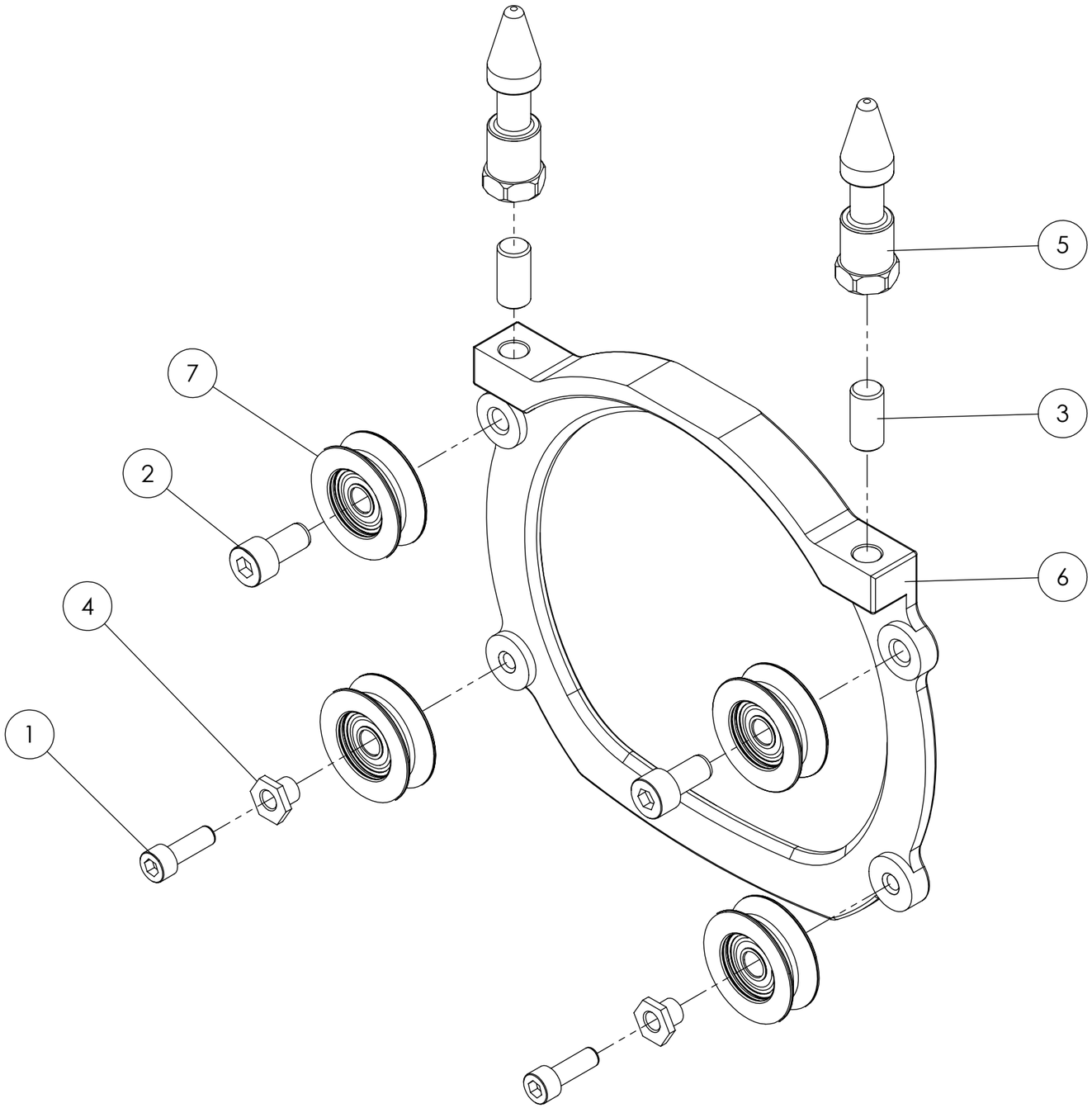

ITEM NO.	PART NUMBER	DESCRIPTION	QTY.
1	121006018-12.9FZ	Allen Screw DIN912 M6 x 18 12.9Z	2
2	121008016-12.9FZ	Allen screw DIN912 M8 x 16 12.9Z	2
3	14080800	Stud, M10 x 20	2
4	26080100	Adjuster, eccentric	2
5	40070300	Guide cone, int. M10	2
6	42020600	Blade guard rotary flange	1
7	45010401	Roller, blade guard holder, assembly	4

Assy. Number		A4200001
Assy. Description		Blade guard rotary flange
Date	2011-07-12	TRACTIVE
Revision	--02	Gjutargatan 54 S-781 70 Borlänge Tel +46 243 22 11 55 Fax +46 243 22 11 80 www.tractive.se / www.pentruder.com
Drawn	KRT	
Approved		
Supercedes		

THIS DRAWING IS THE PROPERTY OF **Tractive AB**. ITS SUBMISSION DOES NOT INCLUDE OR CARRY THE RIGHT TO MAKE, USE OR SELL WHAT IS ILLUSTRATED WITHOUT THE WRITTEN CONSENT OF **Tractive AB**.

Scale	1:1.5	
Drawing Size	A3	SHEET 1 OF 2

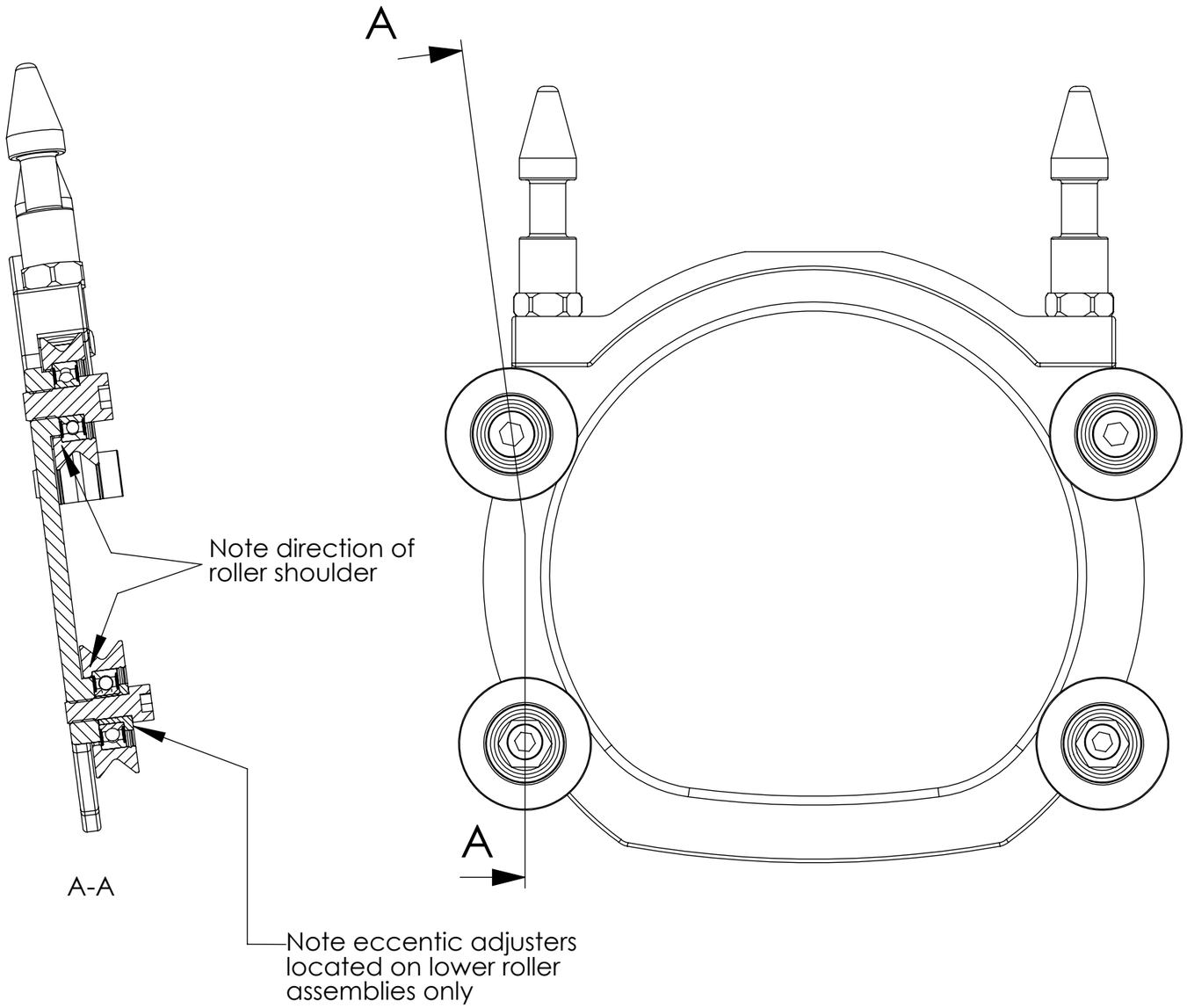

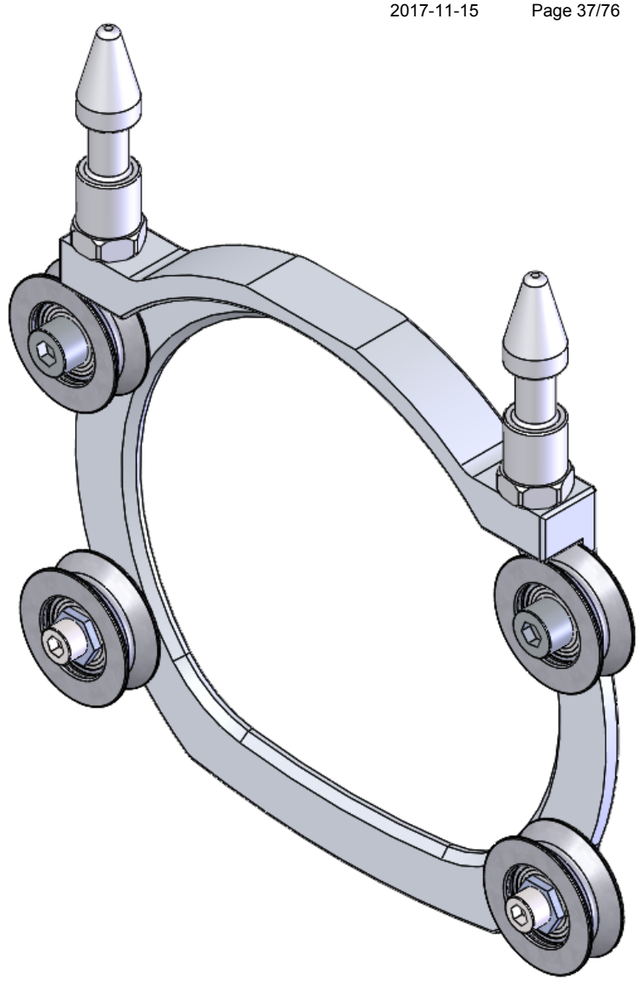

Assy. Number	A4200001	
Assy. Description	Blade guard rotary flange	
Date	2011-07-12	TRACTIVE
Revision	01	Gjutargatan 54 S-781 70 Borlänge
Drawn	KRT	Tel +46 243 22 11 55
Approved		Fax +46 243 22 11 80
Supercedes		www.tractive.se / www.pentruder.com

THIS DRAWING IS THE PROPERTY OF **Tractive AB**. ITS SUBMISSION DOES NOT INCLUDE OR CARRY THE RIGHT TO MAKE, USE OR SELL WHAT IS ILLUSTRATED WITHOUT THE WRITTEN CONSENT OF **Tractive AB**.

Scale	1:1.5	
Drawing Size	A3	SHEET 2 OF 2

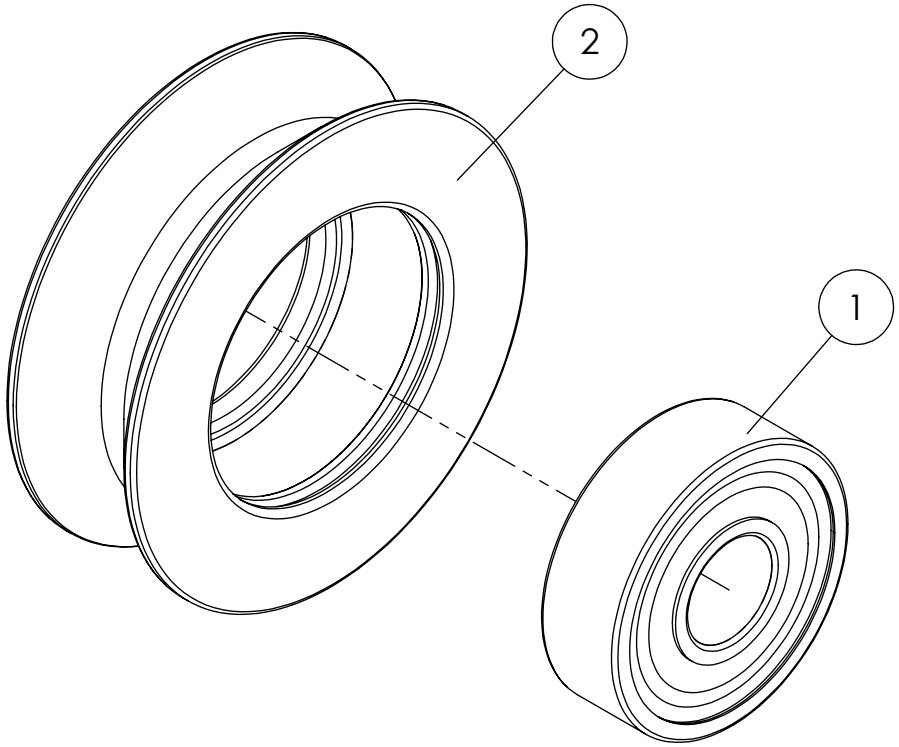

ITEM NO.	PART NUMBER	DESCRIPTION	QTY.
1	20750608	Ball bearing 608-2RS1	1
2	45010400	Roller blade guard holder	1

Assy. Number		45010401
Assy. Description		Roller, blade guard holder, assembly
Date	2011-07-12	TRACTIVE
Revision	--00	
Drawn	KRT	Gjutargatan 54 S-781 70 Borlänge Tel +46 243 22 11 55 Fax +46 243 22 11 80 www.tractive.se / www.pentruder.com
Approved		
Supercedes		

THIS DRAWING IS THE PROPERTY OF **Tractive AB**. ITS SUBMISSION DOES NOT INCLUDE OR CARRY THE RIGHT TO MAKE, USE OR SELL WHAT IS ILLUSTRATED WITHOUT THE WRITTEN CONSENT OF **Tractive AB**.

Scale	2:1	
Drawing Size	A3	SHEET 1 OF 2

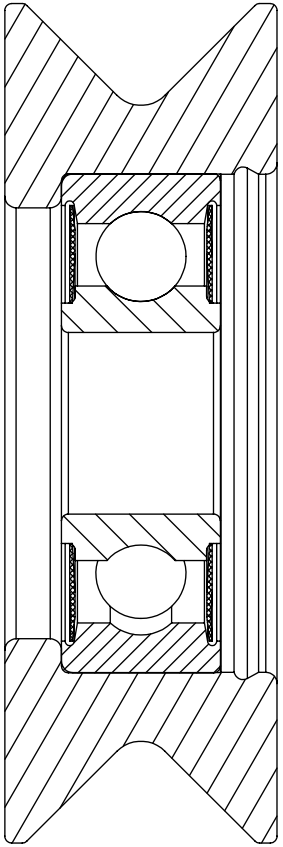

Section View

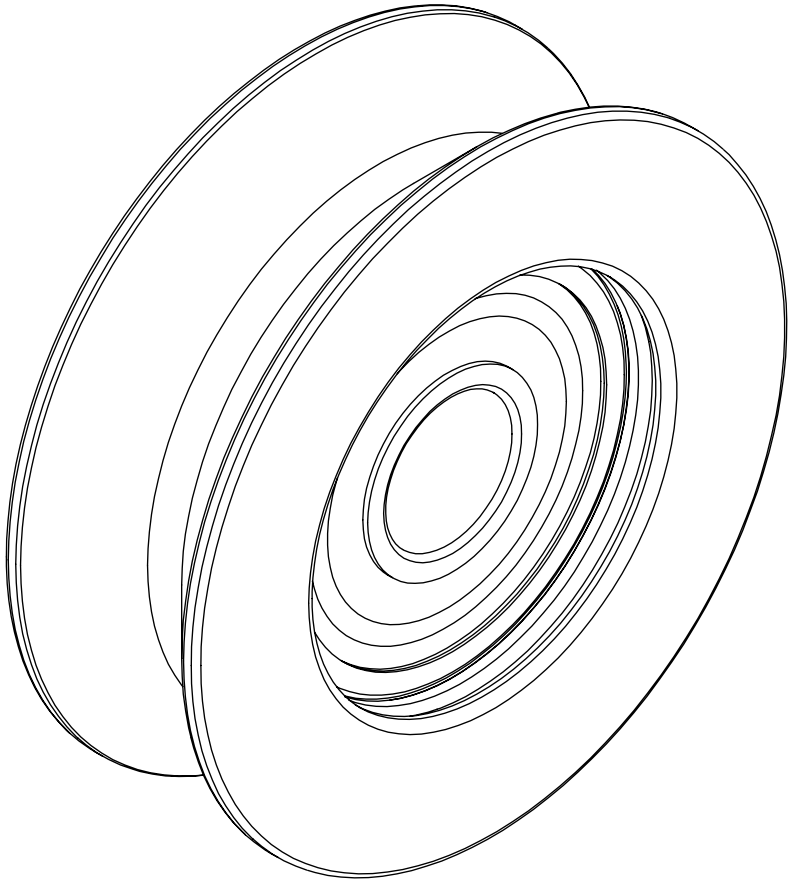

Assembled View

Assy. Number		45010401
Assy. Description		Roller, blade guard holder, assembly
Date	2011-07-12	TRACTIVE
Revision	01	
Drawn	KRT	Gjutargatan 54 S-781 70 Borlänge Tel +46 243 22 11 55 Fax +46 243 22 11 80 www.tractive.se / www.pentruder.com
Approved		
Supercedes		

THIS DRAWING IS THE PROPERTY OF **Tractive AB**. ITS SUBMISSION DOES NOT INCLUDE OR CARRY THE RIGHT TO MAKE, USE OR SELL WHAT IS ILLUSTRATED WITHOUT THE WRITTEN CONSENT OF **Tractive AB**.

Scale	3:1	
Drawing Size	A3	SHEET 2 OF 2

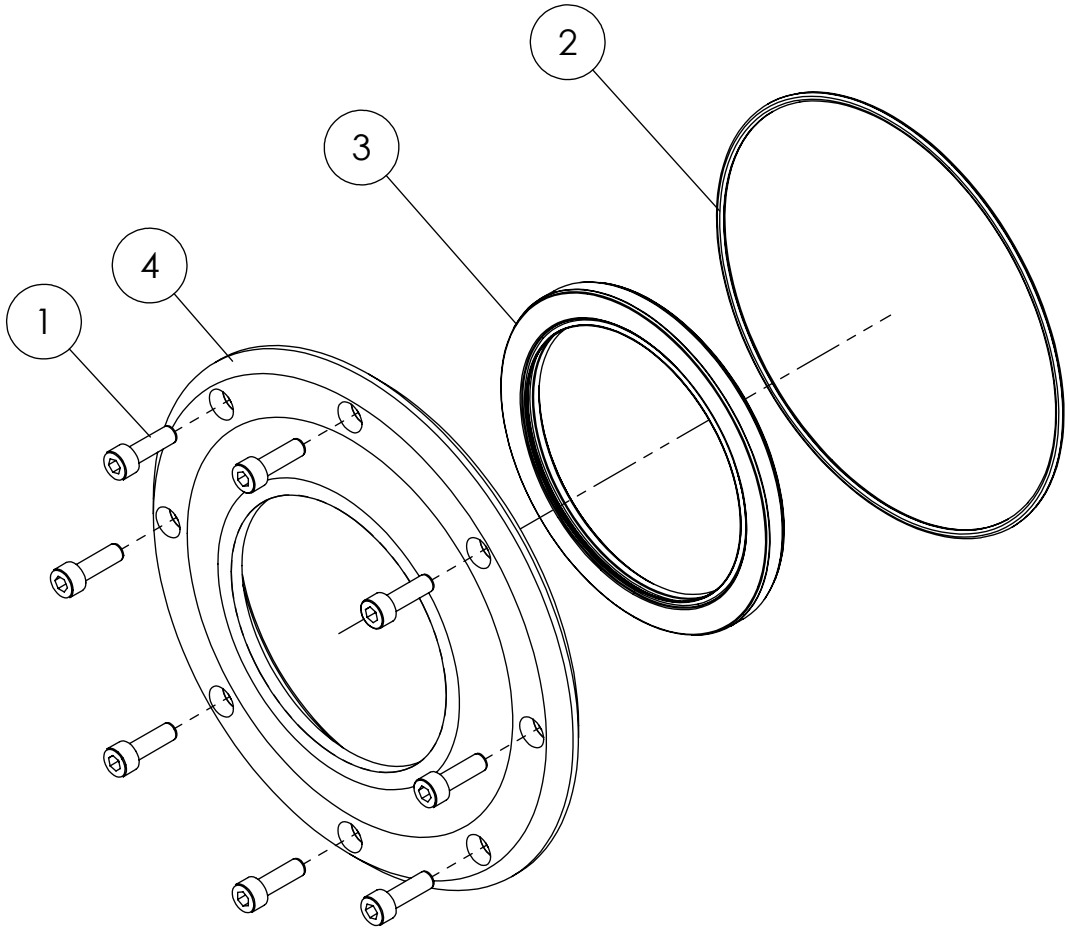

ITEM NO.	PART NUMBER	DESCRIPTION	QTY.
1	121005016-12.9FZ	Allen Screw DIN912 M5 x 16 12.9Z	8
2	23120122	O-ring 122 x 2 NBR 70	1
3	24008010007	Radial seal 80 x 100 x 7 w. dust lip	1
4	42070100	Flange, tapered, blade guard holder	1

Assy. Number		A4200002
Assy. Description		Flange Assembly, tapered, blade guard holder
Date	2011-07-12	TRACTIVE
Revision	--00	
Drawn	KRT	Gjutargatan 54 S-781 70 Borlänge Tel +46 243 22 11 55 Fax +46 243 22 11 80 www.tractive.se / www.pentruder.com
Approved		
Supercedes		

THIS DRAWING IS THE PROPERTY OF **Tractive AB**. ITS SUBMISSION DOES NOT INCLUDE OR CARRY THE RIGHT TO MAKE, USE OR SELL WHAT IS ILLUSTRATED WITHOUT THE WRITTEN CONSENT OF **Tractive AB**.

Scale	1:2	
Drawing Size	A3	SHEET 1 OF 2

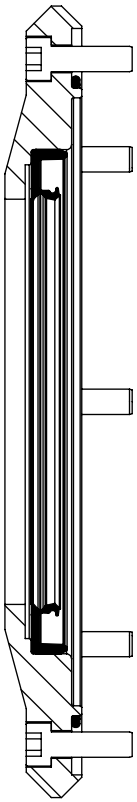

Section View

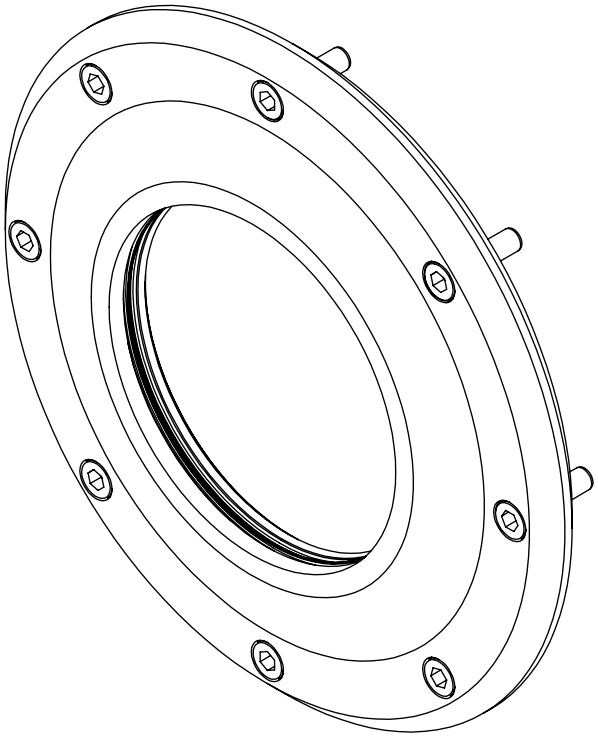

Assembled View

Assy. Number		A4200002
Assy. Description		Flange Assembly, tapered, blade guard holder
Date	2011-07-12	TRACTIVE
Revision	01	
Drawn	KRT	Gjutargatan 54 S-781 70 Borlänge Tel +46 243 22 11 55 Fax +46 243 22 11 80 www.tractive.se / www.pentruder.com
Approved		
Supercedes		

THIS DRAWING IS THE PROPERTY OF **Tractive AB**. ITS SUBMISSION DOES NOT INCLUDE OR CARRY THE RIGHT TO MAKE, USE OR SELL WHAT IS ILLUSTRATED WITHOUT THE WRITTEN CONSENT OF **Tractive AB**.

Scale	1:1.5	
Drawing Size	A3	SHEET 2 OF 2

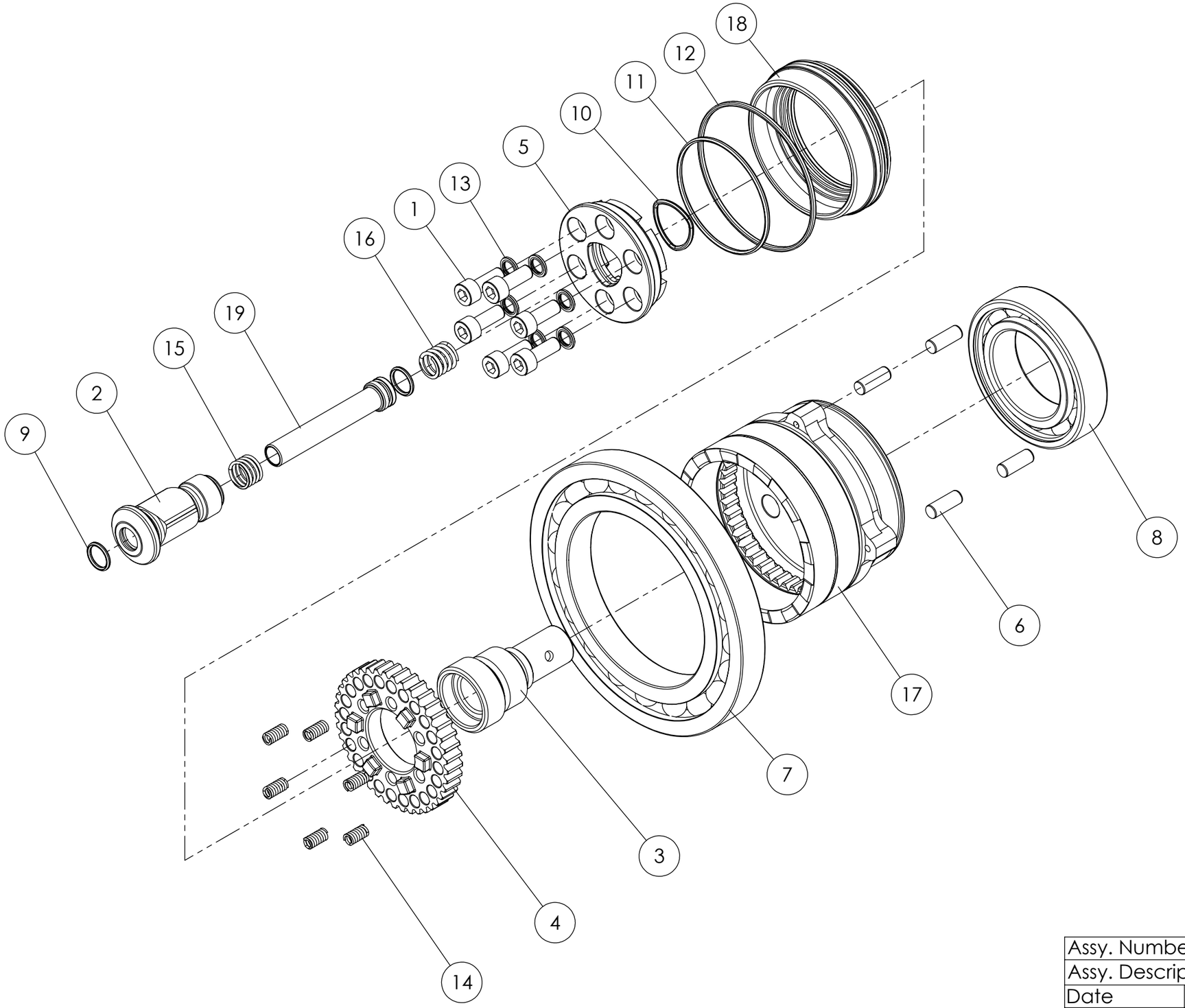

ITEM NO.	PART NUMBER	DESCRIPTION	QTY.
1	121006016-12.9FZ	Allen Screw DIN912 M6 x 16 12.9Z	6
2	14010200	Pull stud	1
3	14010300	Screw quick disconnect coupling	1
4	16180200	Spline washer, with dogs	1
5	16230200	Washer, dog type, int. triangular	1
6	17306160	Cyl. Pin CPK 6m6 x 16 Hardened	4
7	207016016	Ball bearing 16016-C3	1
8	20706008	Ball bearing 6008-C3	1
9	23115010	O-ring 10 x 1.5 NBR 70	2
10	23120020	O-ring 20 x 2 NBR 70	1
11	23120050	O-ring 50 x 2 NBR 70	1
12	23120064	O-ring 64 x 2 NBR 70	1
13	23206710	Dowty Washer 6.7 x 10 x 1 M6	6
14	32090515	Compression spring 0.9 x 5.4 x 15	6
15	32121015	Compression spring 1.2 x 10 x 15	1
16	32150915	Compression spring 1.5 x 9 x 15	1
17	34280300	Spindle, 6-16 / 8-20 / IQ / CBK	1
18	40040100	Centering cone	1
19	50070100	Tube, water feed	1

Assy. Number		34280401
Assy. Description		Spindle 8 - 20 cpl
Date	2011-06-28	TRACTIVE
Revision	--04	
Drawn	KThornton	Gjutargatan 54 S-781 70 Borlänge Tel +46 243 22 11 55 Fax +46 243 22 11 80 www.tractive.se / www.pentruder.com
Approved		
Supercedes		

THIS DRAWING IS THE PROPERTY OF **Tractive AB**. ITS SUBMISSION DOES NOT INCLUDE OR CARRY THE RIGHT TO MAKE, USE OR SELL WHAT IS ILLUSTRATED WITHOUT THE WRITTEN CONSENT OF **Tractive AB**.

Scale	1.5:1	
Drawing Size	A3	SHEET 3 OF 5

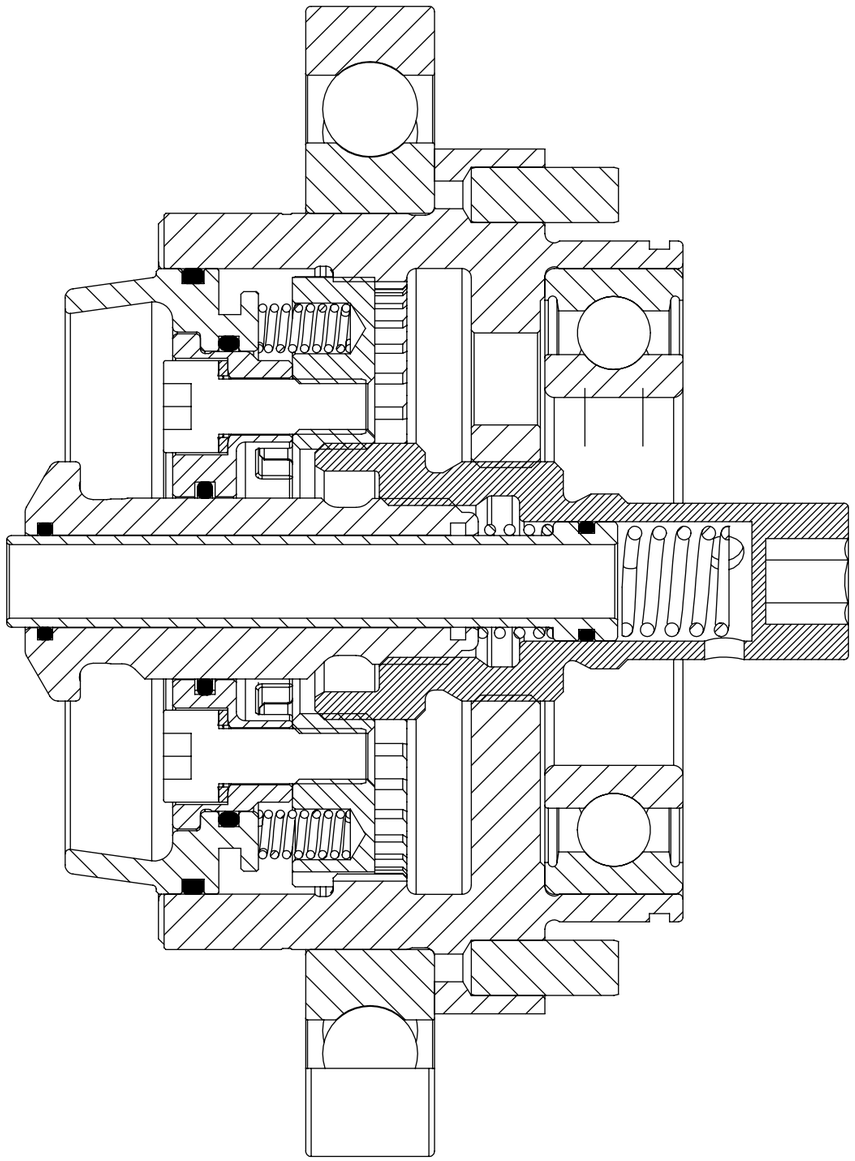

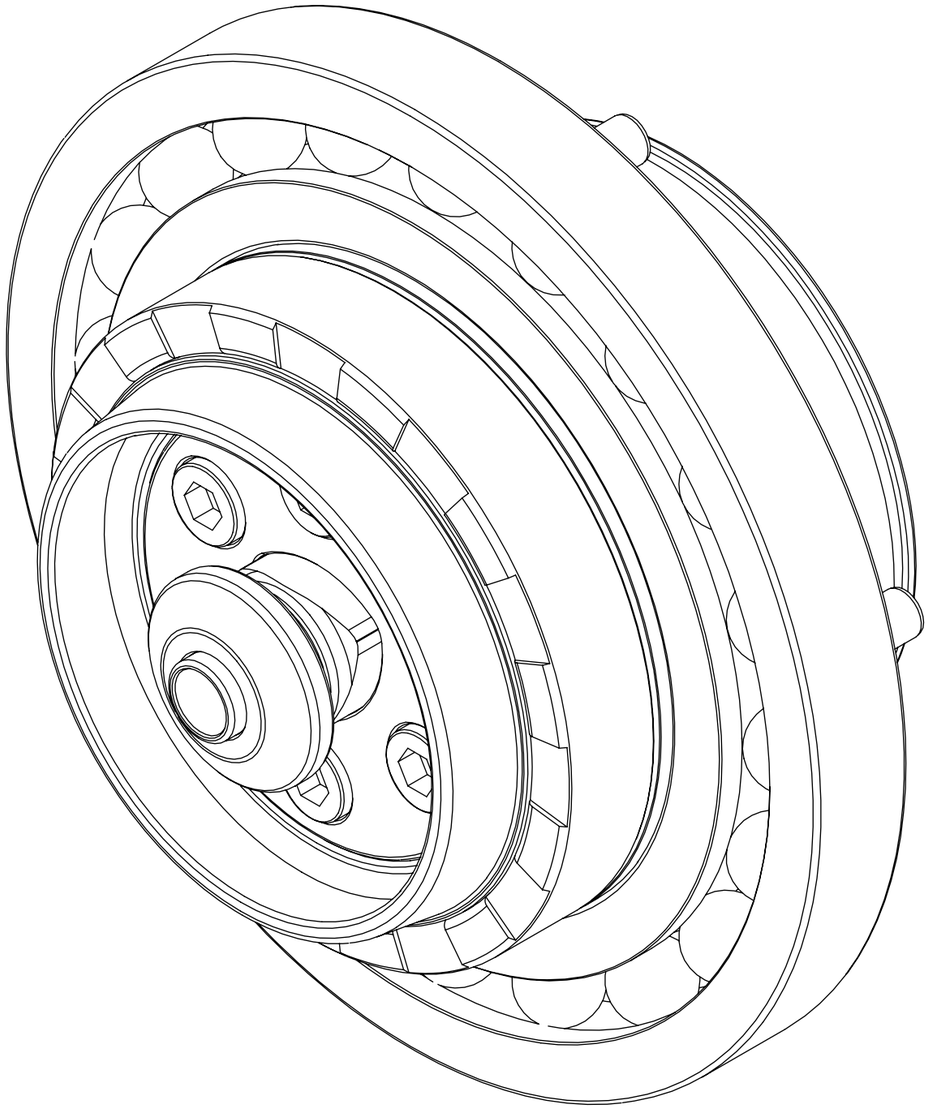

Assembled View

Assy. Number		34280401
Assy. Description		Spindle 8 - 20 cpl
Date	2011-06-28	TRACTIVE
Revision	--04	
Drawn	KThornton	Gjutargatan 54 S-781 70 Borlänge Tel +46 243 22 11 55 Fax +46 243 22 11 80 www.tractive.se / www.pentruder.com
Approved		
Supercedes		

THIS DRAWING IS THE PROPERTY OF **Tractive AB**. ITS SUBMISSION DOES NOT INCLUDE OR CARRY THE RIGHT TO MAKE, USE OR SELL WHAT IS ILLUSTRATED WITHOUT THE WRITTEN CONSENT OF **Tractive AB**.

Scale	1.5:1	
Drawing Size	A3	SHEET 4 OF 5

Preventative Maintenance					
ITEM NO.	PART/ASSY NUMBER	DESCRIPTION	QTY.	80h	160h
1	121004010-12.9FZ	Allen screw DIN912 M4 x 10 12.9Z	4		
2	121006025-12.9FZ	Allen screw, DIN912 M6x25 12.9F	4		
3	121008065-12.9FZ	Allen screw DIN912 M8 x 65 12.9Z	8		
4	16352026	Alu-washer 20 x 26 x 1.5	1	X	X
5	20160204	Cylindrical roller bearing, NU 204 ECP	2		I
6	22110810	Support ring 8 x 14 x 1 DIN988	8		
7	22114005	Support ring PS 40 x 50 x 0.5 mm	1		
8	23112008	O-ring 8 x 1.25 NBR 70	8		X
9	23115005	O-ring 5 x 1.5 NBR 70	2		X
10	23120048	O-ring 48 x 2 NBR 70	1		X
11	23120070	O-ring 70 x 2 NBR 70	1		X
12	23125064	O-ring 64 x 2.5 NBR 70	1		X
13	23125144	O-ring 144 x 2.5 NBR 70	1		X
14	23206710	Dowty Washer 6.7 x 10 x 1 M6	4		X
15	24002203404	Radial seal 22 x 34 x 4	1		X
16	25032015	Magnetic plug M20 x 1.5	1	I	I
17	34040400	Swivel housing	1		
18	34210200	Intermediate gear shaft	1		
19	35371701	Intermediate gear assy, 36T, with SKF NUP 208 ECP roller bearing	1		I
20	57210501	Water Seal Housing wall saw cpl v3	1	I	I
21	A5600011	Housing Assembly, 8-20HF	1		
I=Inspect X=Replace					

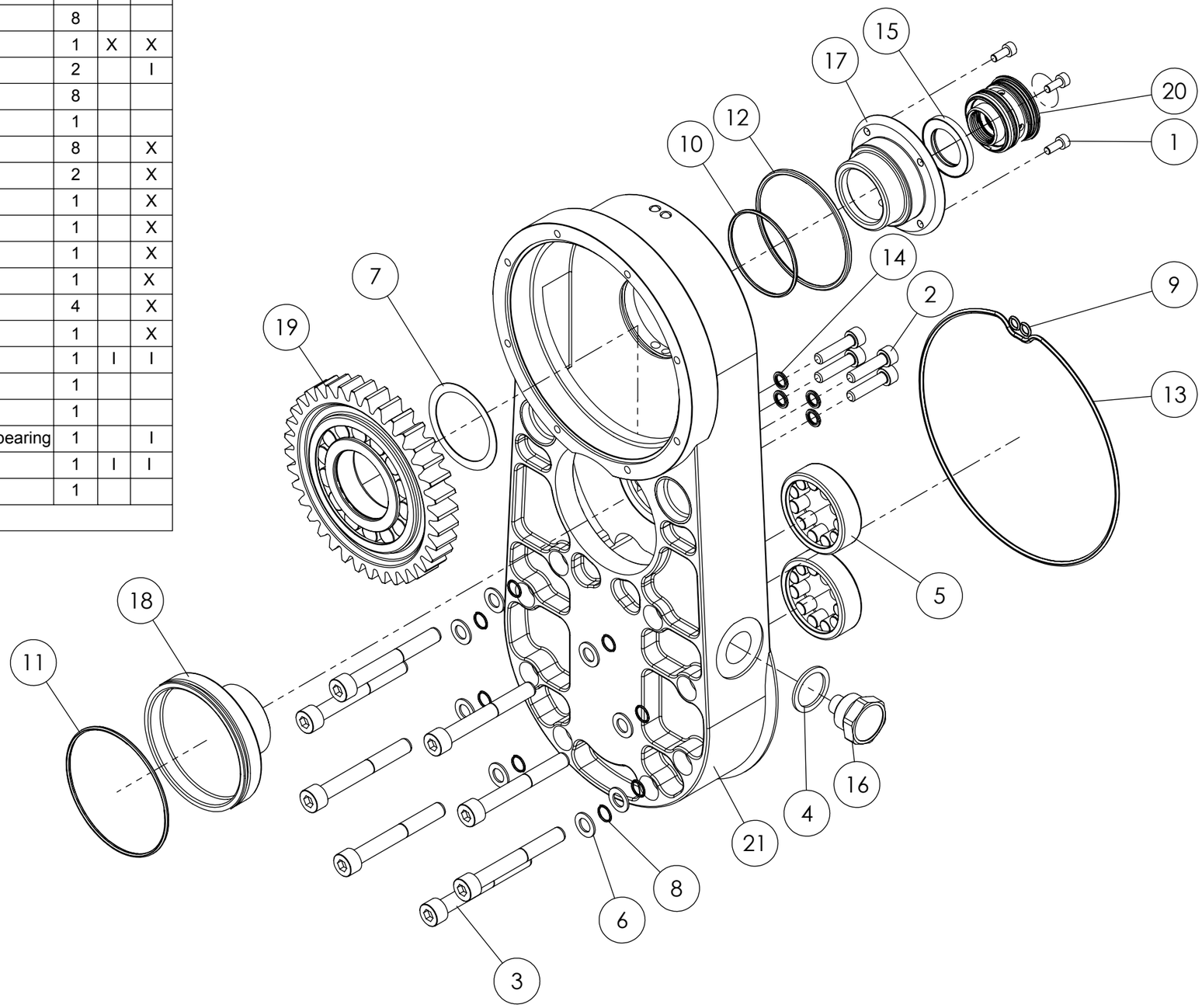

Assy. Number		A5600009
Assy. Description		Arm Housing Assembly, 8-20HF
Date	2011-07-12	TRACTIVE
Revision	01	
Drawn	KRT	Gjutargatan 54 S-781 70 Borlänge Tel +46 243 22 11 55 Fax +46 243 22 11 80 www.tractive.se / www.pentruder.com
Approved		
Supercedes		

THIS DRAWING IS THE PROPERTY OF **Tractive AB**. ITS SUBMISSION DOES NOT INCLUDE OR CARRY THE RIGHT TO MAKE, USE OR SELL WHAT IS ILLUSTRATED WITHOUT THE WRITTEN CONSENT OF **Tractive AB**.

Scale	1:2.5	
Drawing Size	A3	SHEET 3 OF 3

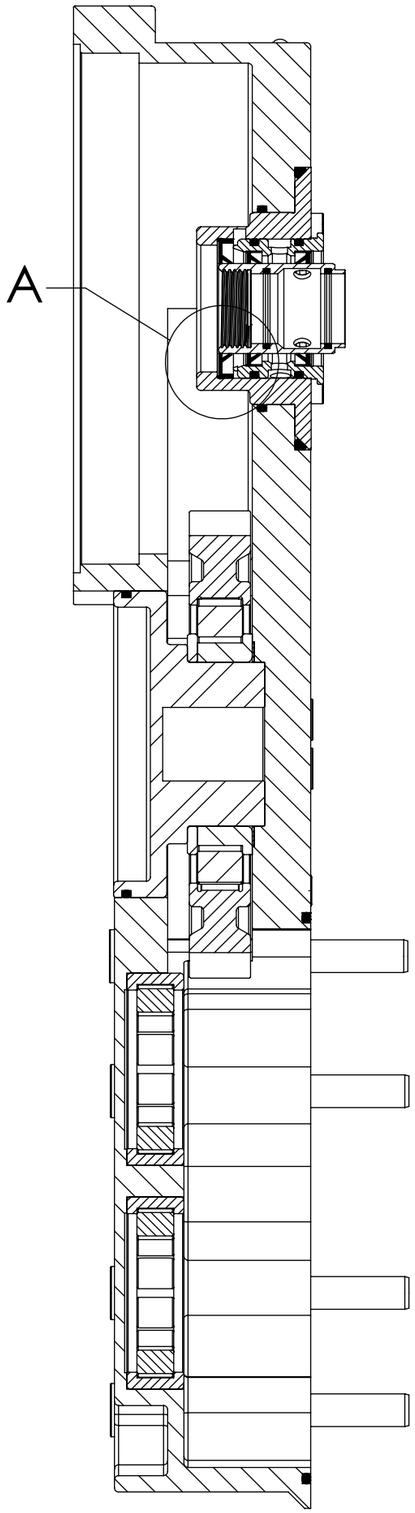

Section View

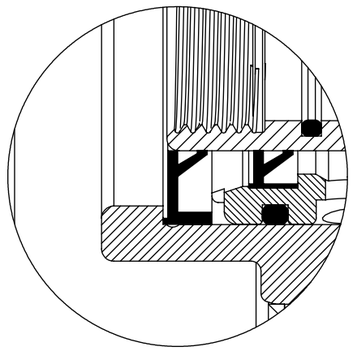

A

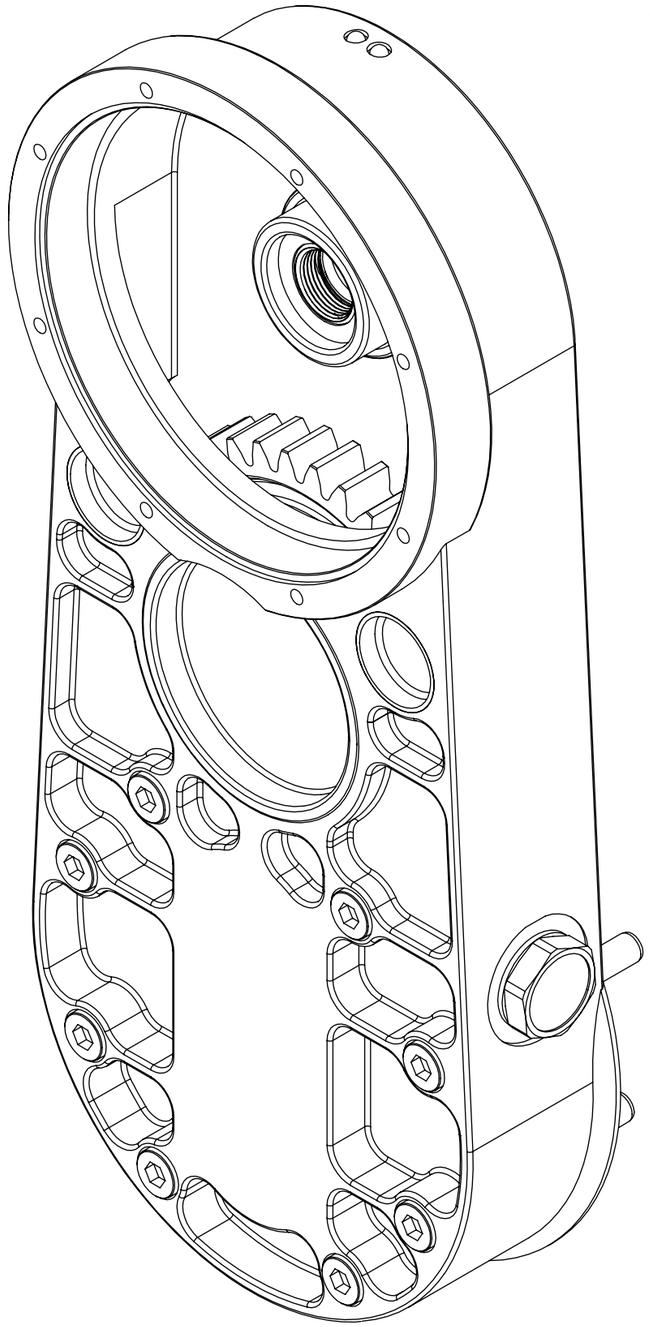

Assembled View

Assy. Number		A5600009
Assy. Description		Arm Housing Assembly, 8-20HF
Date	2011-07-12	TRACTIVE
Revision	01	Gjutargatan 54 S-781 70 Borlänge
Drawn	KRT	Tel +46 243 22 11 55
Approved		Fax +46 243 22 11 80
Supercedes		www.tractive.se / www.pentruder.com

THIS DRAWING IS THE PROPERTY OF **Tractive AB**. ITS SUBMISSION DOES NOT INCLUDE OR CARRY THE RIGHT TO MAKE, USE OR SELL WHAT IS ILLUSTRATED WITHOUT THE WRITTEN CONSENT OF **Tractive AB**.

Scale	1:1.5	
Drawing Size	A3	SHEET 2 OF 3

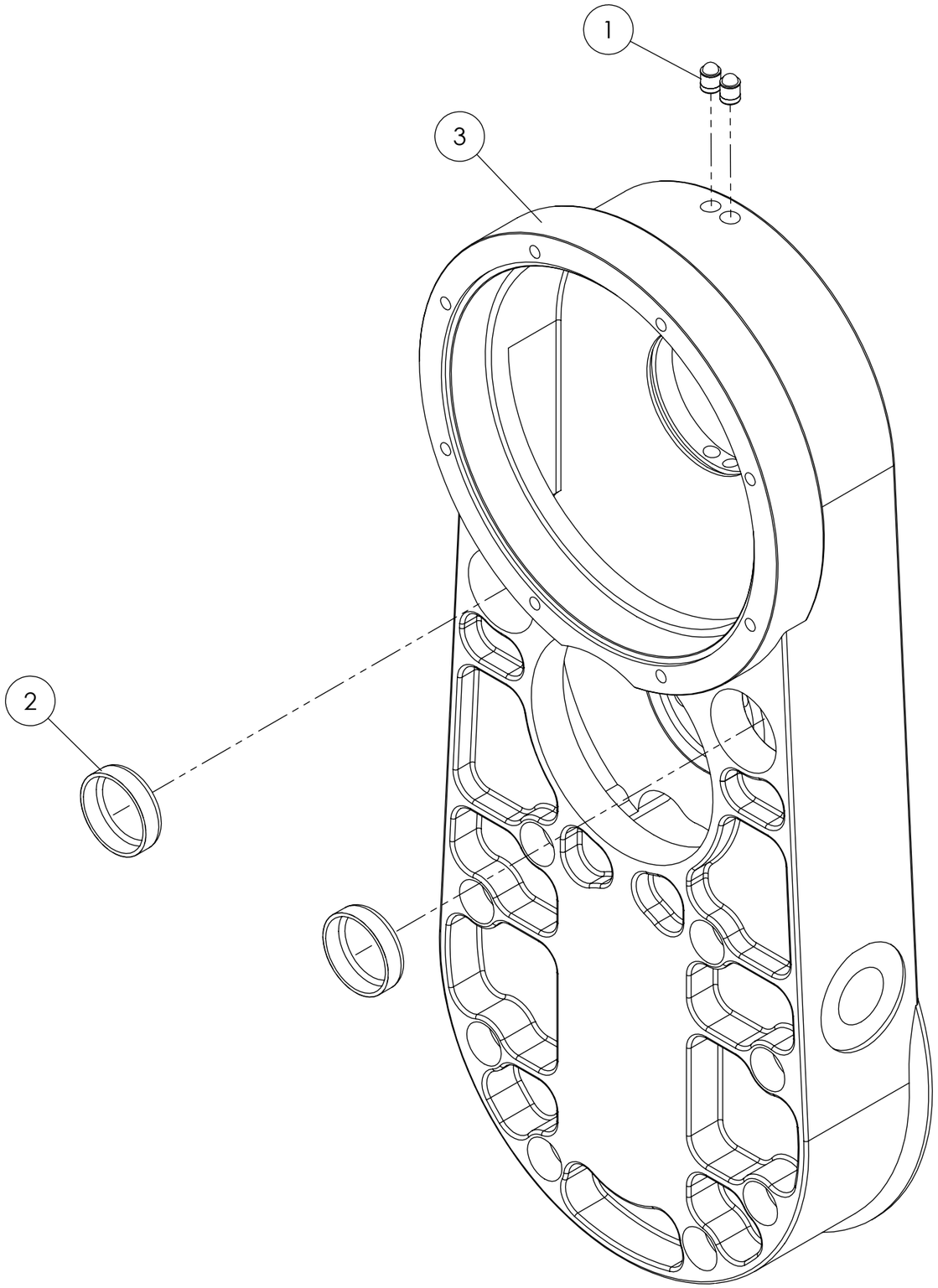

ITEM NO.	PART NUMBER	DESCRIPTION	QTY.
1	25010100	Plug MB 800-060	2
2	25110200	Plug Ø 22	2
3	56010300	Housing 8-20HF	1

Assy. Number	A5600011
Assy. Description	Housing Assembly, 8-20HF
Date	2011-07-12
Revision	01
Drawn	KRT
Approved	
Supercedes	

TRACTIVE

Gjutargatan 54 S-781 70 Borlänge
Tel +46 243 22 11 55
Fax +46 243 22 11 80
www.tractive.se / www.pentruder.com

THIS DRAWING IS THE PROPERTY OF **Tractive AB**. ITS SUBMISSION DOES NOT INCLUDE OR CARRY THE RIGHT TO MAKE, USE OR SELL WHAT IS ILLUSTRATED WITHOUT THE WRITTEN CONSENT OF **Tractive AB**.

Scale	1:1.5	
Drawing Size	A3	SHEET 1 OF 2

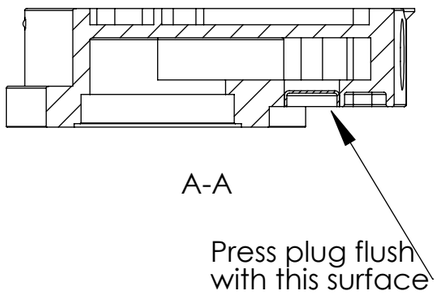

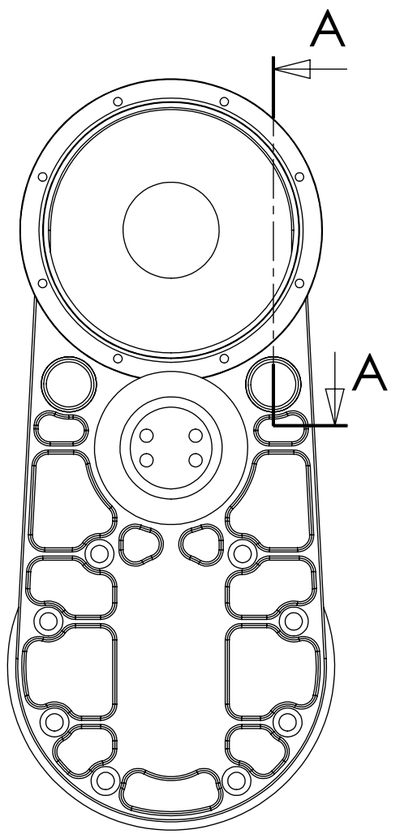

Front

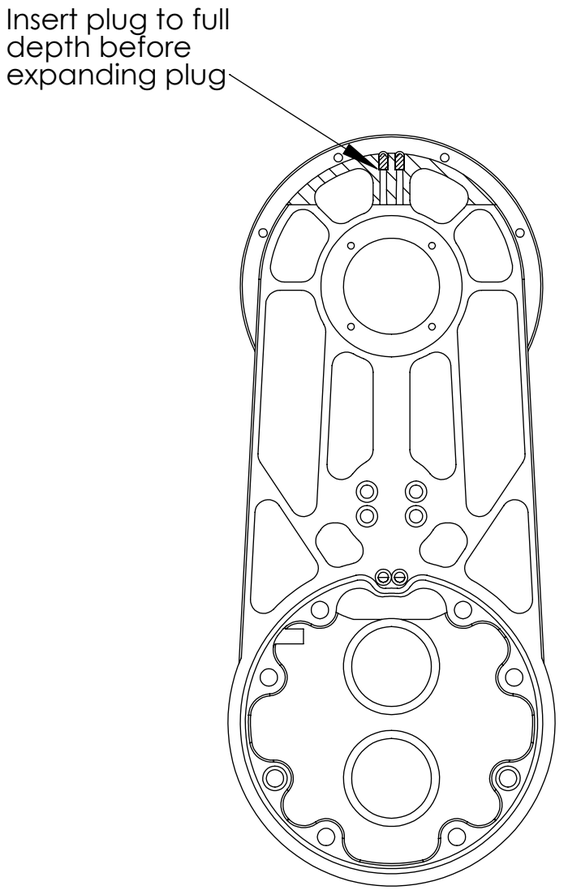

Back

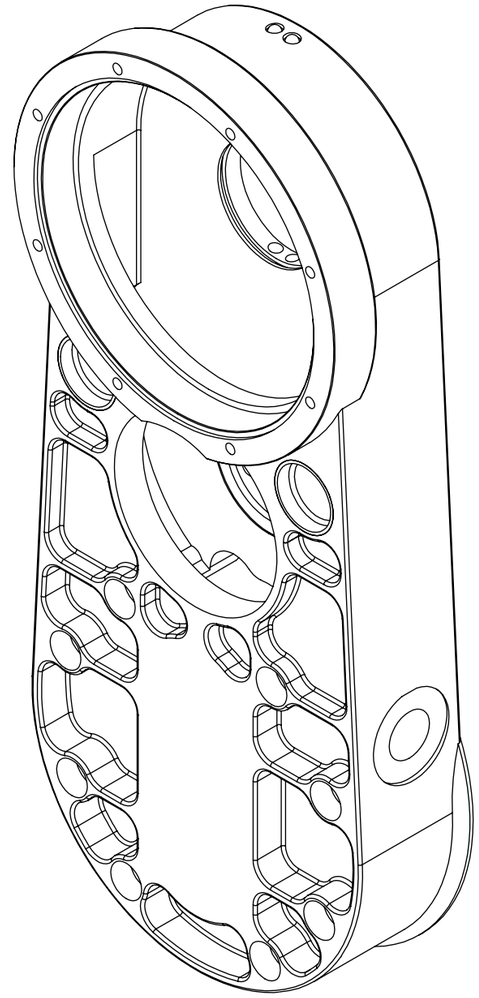

Assembled View

Assy. Number		A5600011
Assy. Description		Housing Assembly, 8-20HF
Date	2011-07-12	TRACTIVE
Revision	01	
Drawn	KRT	Gjutargatan 54 S-781 70 Borlänge Tel +46 243 22 11 55 Fax +46 243 22 11 80 www.tractive.se / www.pentruder.com
Approved		
Supercedes		

THIS DRAWING IS THE PROPERTY OF **Tractive AB**. ITS SUBMISSION DOES NOT INCLUDE OR CARRY THE RIGHT TO MAKE, USE OR SELL WHAT IS ILLUSTRATED WITHOUT THE WRITTEN CONSENT OF **Tractive AB**.

Scale	1:2	
Drawing Size	A3	SHEET 2 OF 2

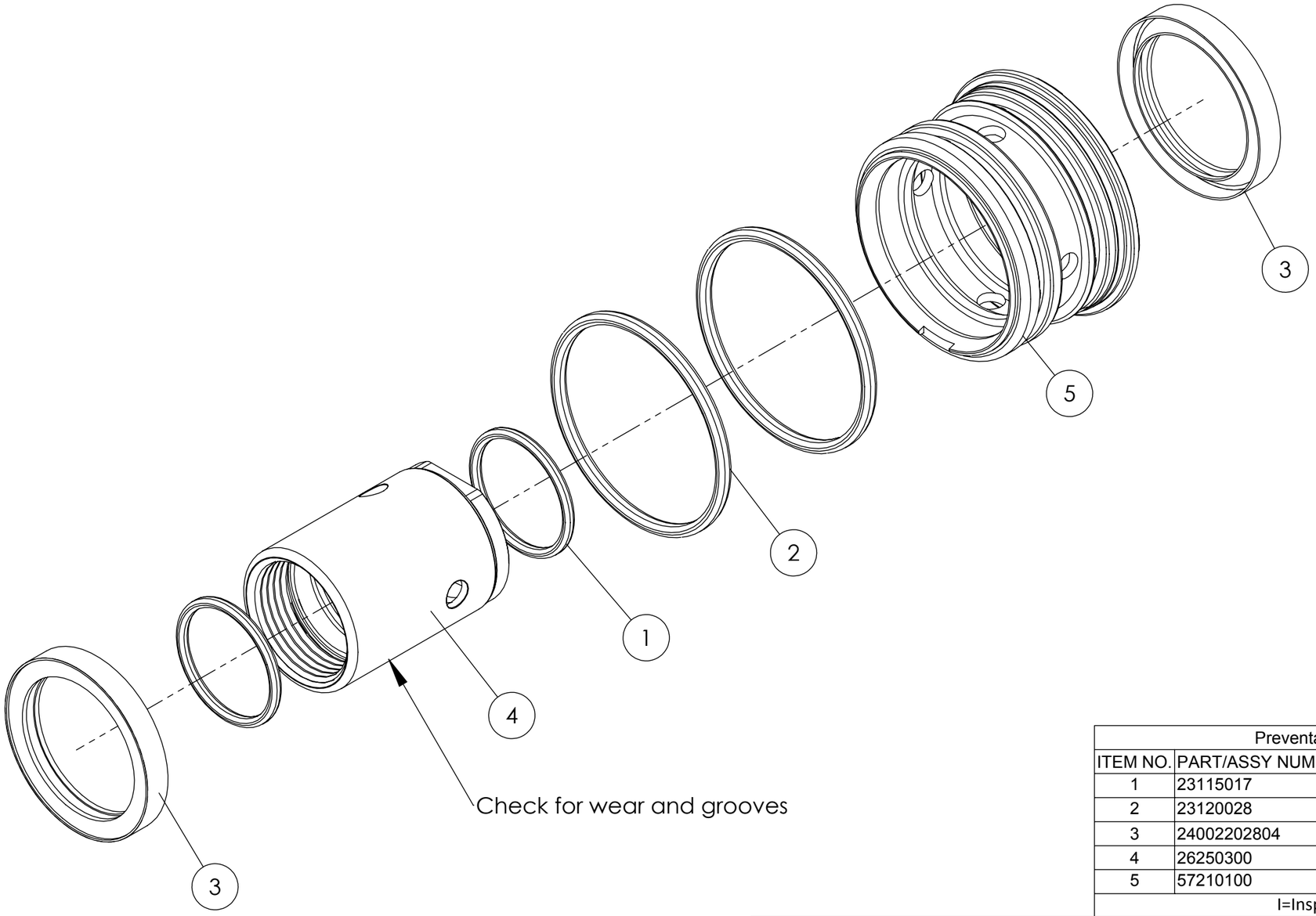

Preventative Maintenance				
ITEM NO.	PART/ASSY NUMBER	DESCRIPTION	QTY.	80h
1	23115017	O-ring 17 x 1.5 NBR 70	2	X
2	23120028	O-ring 28 x 2.0 NBR 70	2	X
3	24002202804	Seal, water 22 x 28 x 4	2	X
4	26250300	Wear sleeve	1	I
5	57210100	Water seal housing	1	

I=Inspect X=Replace

Suppliers Part Number	Supercedes	Date 2017-01-02	Part Number **57210501**
Material Code	Material Dimension	Procurement	Description Water Seal Housing wall saw cpl v3
Material	Geometric Tolerance	Proj	
Derived From	Scale 1:1 / Mass	Sheet 3/3	
Drawn by JG / Approved by AJ / Designed by	THIS DRAWING IS THE PROPERTY OF Tractive AB. ITS SUBMISSION DOES NOT INCLUDE OR CARRY THE RIGHT TO MAKE, USE OR SELL WHAT IS ILLUSTRATED WITHOUT THE WRITTEN CONSENT OF Tractive AB.	Revision --01	TRACTIVE Gjutargatan 54 S-781 70 Borlänge Tel +46 243 22 11 55 Fax +46 243 22 11 80 www.tractive.se / www.pentruder.com

Dimensions in mm

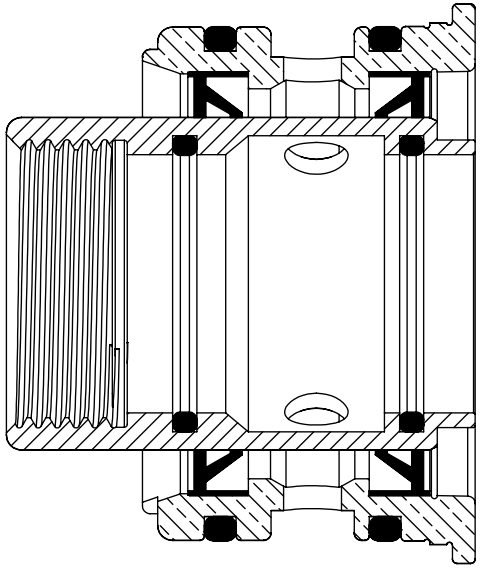

Section View

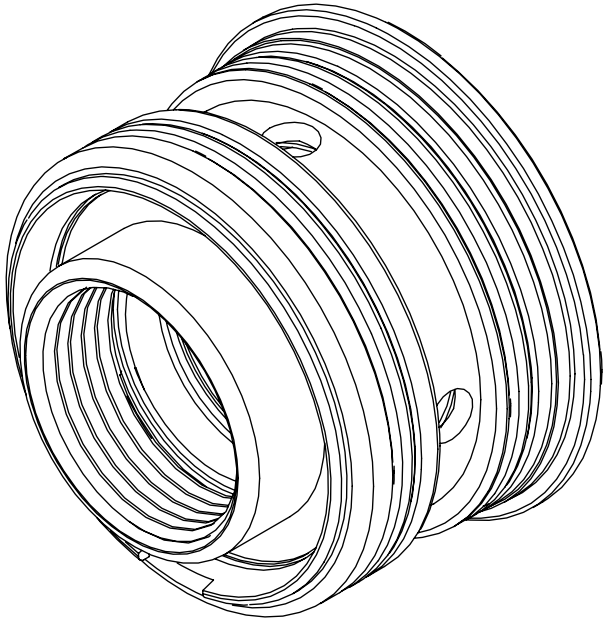

Assembled View

Assy. Number		57210501
Assy. Description		Water Seal Housing wall saw cpl v3
Date	2017-01-02	TRACTIVE
Revision		
Drawn	JG	Gjutargatan 54 S-781 70 Borlänge Tel +46 243 22 11 55 Fax +46 243 22 11 80 www.tractive.se / www.pentruder.com
Approved	AJ	
Supercedes		

THIS DRAWING IS THE PROPERTY OF **Tractive AB**. ITS SUBMISSION DOES NOT INCLUDE OR CARRY THE RIGHT TO MAKE, USE OR SELL WHAT IS ILLUSTRATED WITHOUT THE WRITTEN CONSENT OF **Tractive AB**.

Scale	2:1	
Drawing Size	A3	SHEET 2 OF 3

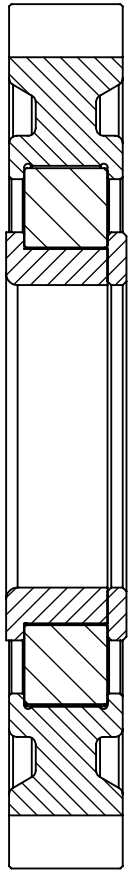

Section View

Assembled View

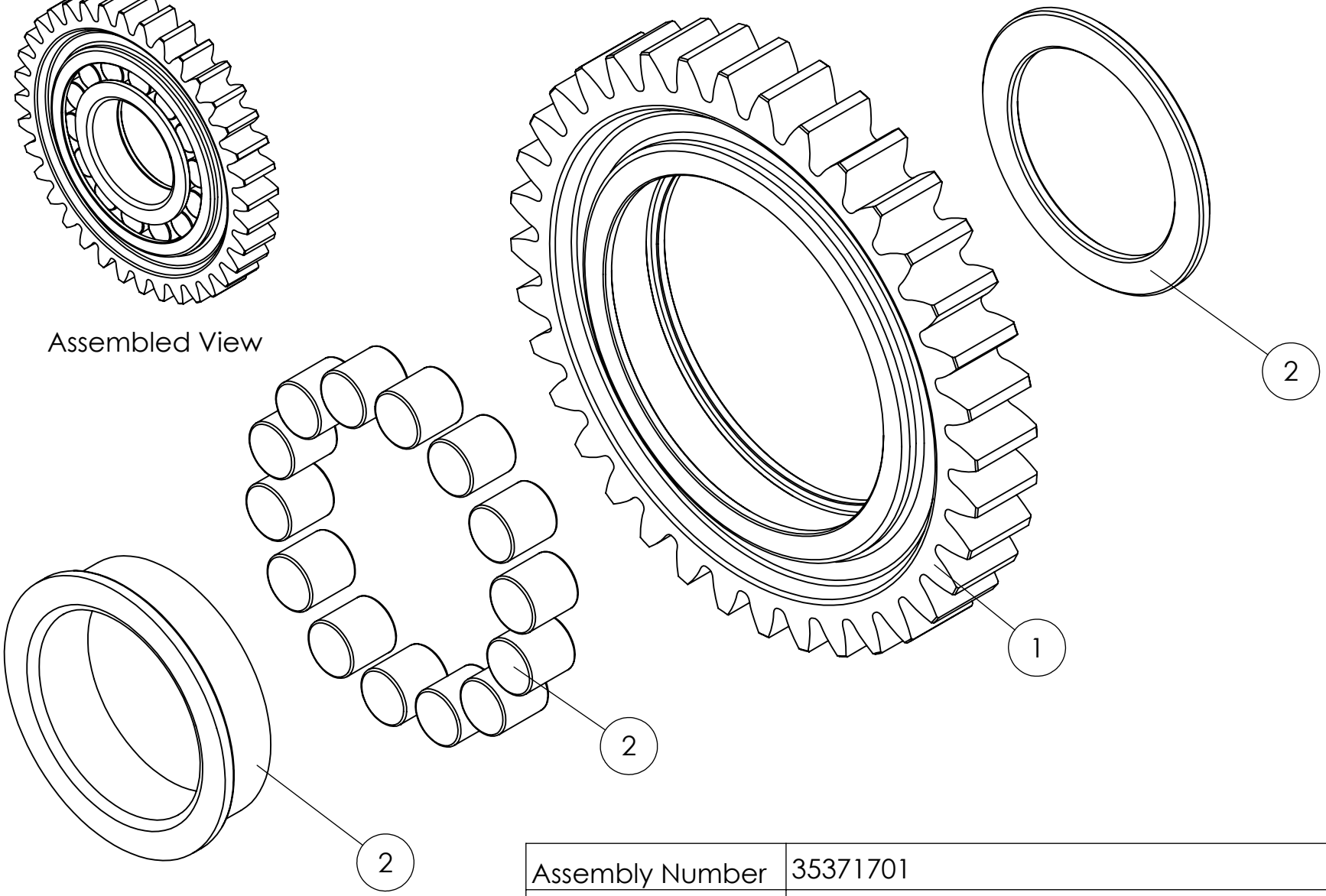

Assembly Number	35371701
Assembly Name	Intermediate gear assy, 36T, with modified NUP 208 roller bearing
Revision	1
Date	08-12-2010
Drawn	AJ
SHOP DRAWING	

Gjutargatan 54 S-781 70 Borlänge
Tel +46 243 22 11 55
Fax +46 243 22 11 80

TRACTIVE

Sheet 1 of 1

ITEM NO.	PART NUMBER	REV.#	DESCRIPTION	QTY
1	35371700		Intermediate gear, 36T, 8-20HF, CBK	1
2	20170208-MOD		Tractive bearing, NUP208, modified	1

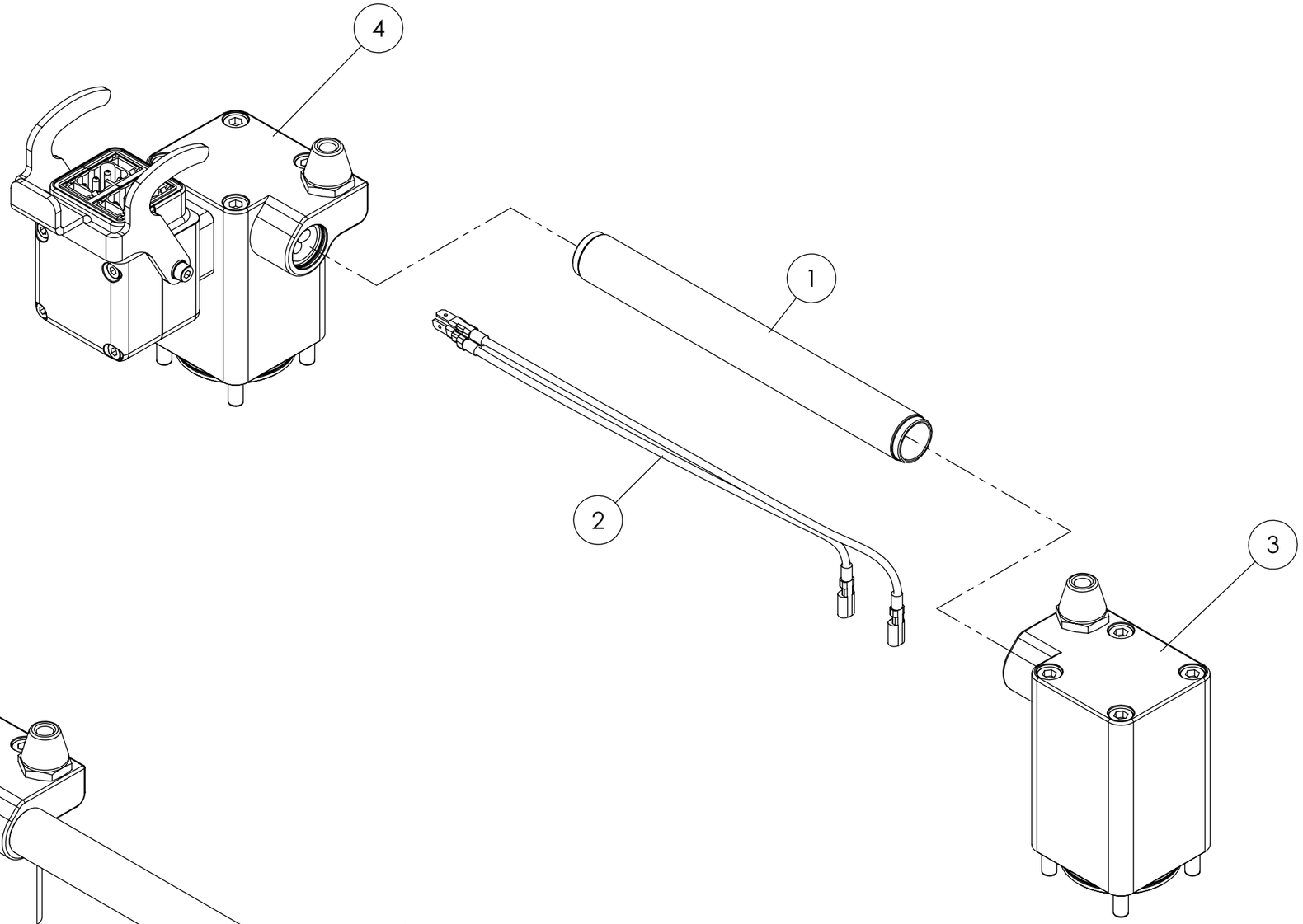

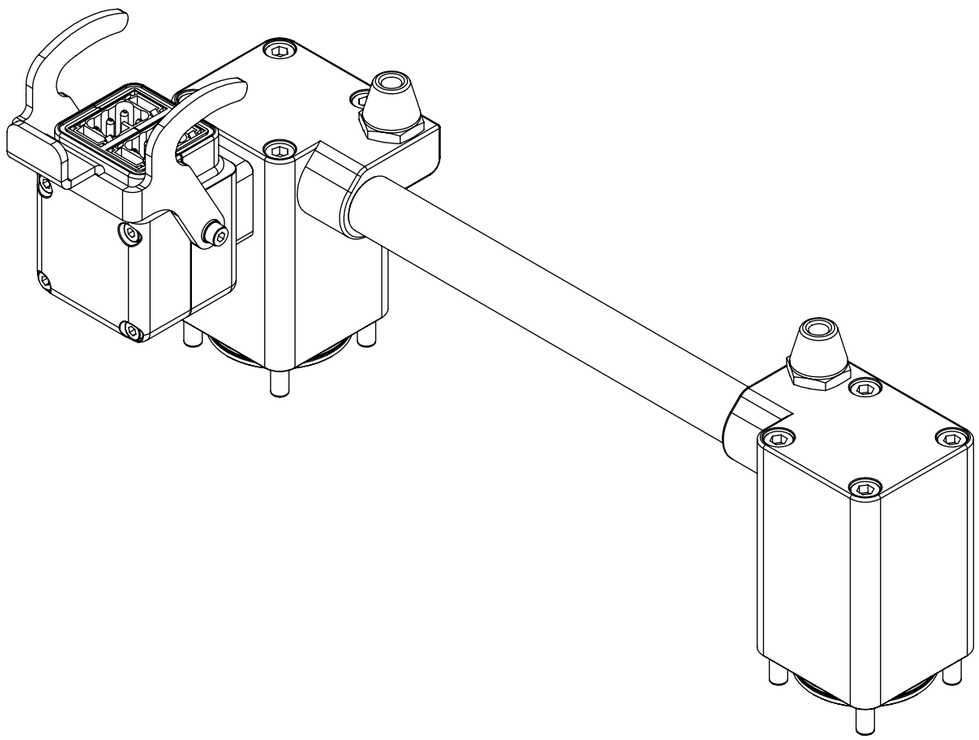

ITEM NO.	PART NUMBER	DESCRIPTION	QTY.
1	50190100	Tube, Handle	1
2	64018001	Cables between feed motors 8-20HF / IQ / CBK	1
3	A5800003	DC Motor Cover Assembly, Armrotation Motor	1
4	A5800004	DC Motor Cover Assembly, Travel Motor	1

Assy. Number		A5800002
Assy. Description		DC Motor Cover Assembly
Date	2011-07-12	TRACTIVE
Revision	--03	
Drawn	KRT	Gjutargatan 54 S-781 70 Borlänge Tel +46 243 22 11 55 Fax +46 243 22 11 80 www.tractive.se / www.pentruder.com
Approved		
Supercedes		

THIS DRAWING IS THE PROPERTY OF **Tractive AB**. ITS SUBMISSION DOES NOT INCLUDE OR CARRY THE RIGHT TO MAKE, USE OR SELL WHAT IS ILLUSTRATED WITHOUT THE WRITTEN CONSENT OF **Tractive AB**.

Scale	1:2	
Drawing Size	A3	SHEET 1 OF 1

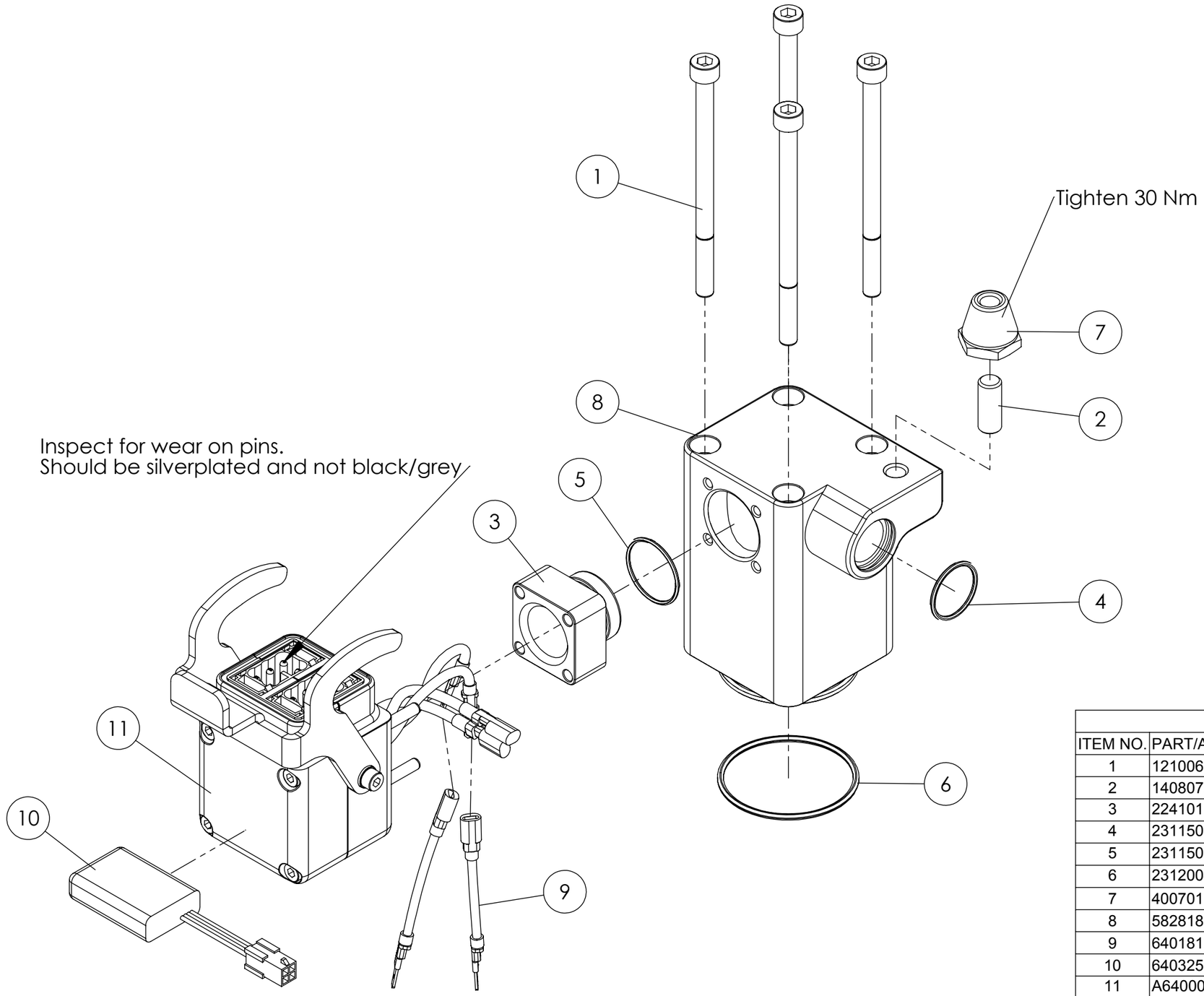

Preventative Maintenance					
ITEM NO.	PART/ASSY NUMBER	DESCRIPTION	QTY.	80h	160h
1	121006090-8.8A2	Allen Screw DIN912 M6 x 90 8.8A2	4		
2	14080700	Stud, M10 x 20	1		
3	22410100	Spacer, Cannon connector, 24V	1		
4	23115019	O-ring 19 x 1.5 NBR 70	1		I
5	23115022	O-ring 22 x 1.5 NBR 70	1		I
6	23120044	O-ring 44 x 2 NBR 70	1		I
7	40070100	Guide cone int. M8	1		
8	58281800	Cover, DC-motor, left, 8-20HF.SLDPRT	1		
9	64018101	Extension cables feedmotors 8-20HF + Lean	1		
10	64032550	Chassis ID-card	1		I
11	A6400001	Connector, Assembly, on Chassis, 24V	1		I
I=Inspect X=Replace					

Assy. Number	A5800004
Assy. Description	DC Motor Cover Assembly, Travel Motor
Date	2011-07-20
Revision	01
Drawn	KRT
Approved	AJ
Supercedes	

TRACTIVE

Gjutargatan 54 S-781 70 Borlänge
Tel +46 243 22 11 55
Fax +46 243 22 11 80
www.tractive.se / www.pentruder.com

THIS DRAWING IS THE PROPERTY OF **Tractive AB**. ITS SUBMISSION DOES NOT INCLUDE OR CARRY THE RIGHT TO MAKE, USE OR SELL WHAT IS ILLUSTRATED WITHOUT THE WRITTEN CONSENT OF **Tractive AB**.

Scale	1:1.5	
Drawing Size	A3	SHEET 5 OF 5

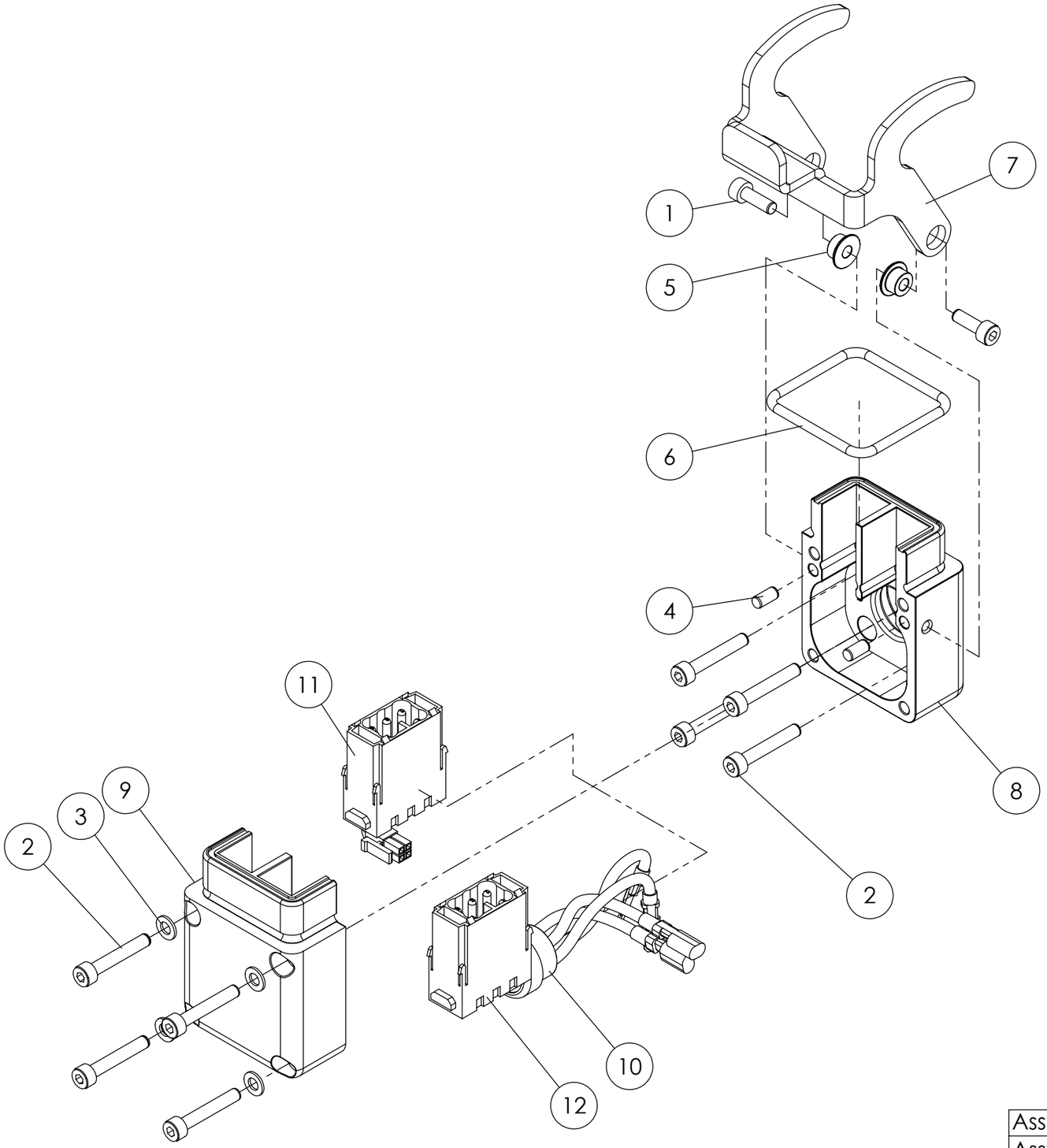

ITEM NO.	PART/ASSY NUMBER	DESCRIPTION	QTY.
1	121004012-12.9FZ	Allen screw DIN912 M4 x 12 12.9Z	2
2	121004025-8.8A2	Allen screw DIN912 M4 x 25 8.8A2	8
3	16400400	Plain washer 4.3 x 9 x 0.9	4
4	17304080-RF	Cyl. pin, CPR 4m6x8 Stainless	2
5	22170300	Spacer, locking cam, HF	2
6	23130042	O-ring, 42 x 3 NBR 70	1
7	31260200	Locking cam, 24V connector	1
8	57580700	Cover, male, inside, on chassis, 24V	1
9	57580800	Cover, male, outside, on chassis, 24V	1
10	64073400	Insert, PG16 4 x 3.5	1
11	64100900	ID-card connection (motor+chassis)	1
12	A6400009	Connector, assembly, on chassie	1

Assy. Number		A6400001
Assy. Description		Connector, Assembly, on Chassis, 24V
Date	2012-04-25	TRACTIVE
Revision		Gjutargatan 54 S-781 70 Borlänge Tel +46 243 22 11 55 Fax +46 243 22 11 80 www.tractive.se / www.pentruder.com
Drawn	KRT	
Approved	AJ	
Supercedes		
Scale	1:1.5	
Drawing Size	A3	SHEET 1 OF 2

THIS DRAWING IS THE PROPERTY OF **Tractive AB**. ITS SUBMISSION DOES NOT INCLUDE OR CARRY THE RIGHT TO MAKE, USE OR SELL WHAT IS ILLUSTRATED WITHOUT THE WRITTEN CONSENT OF **Tractive AB**.

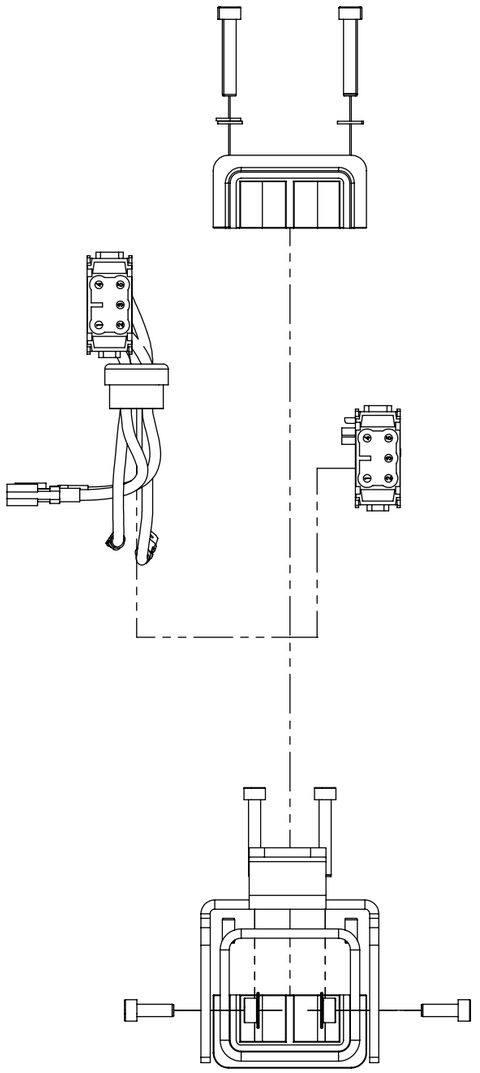

Top Exploded view

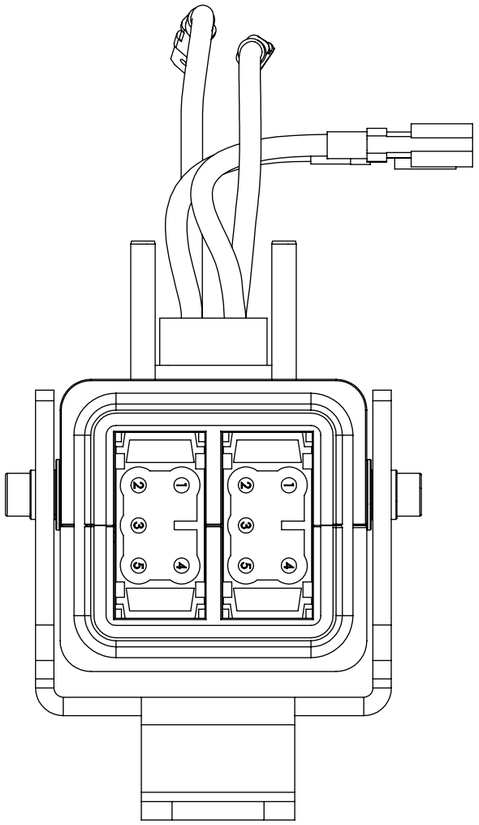

Top

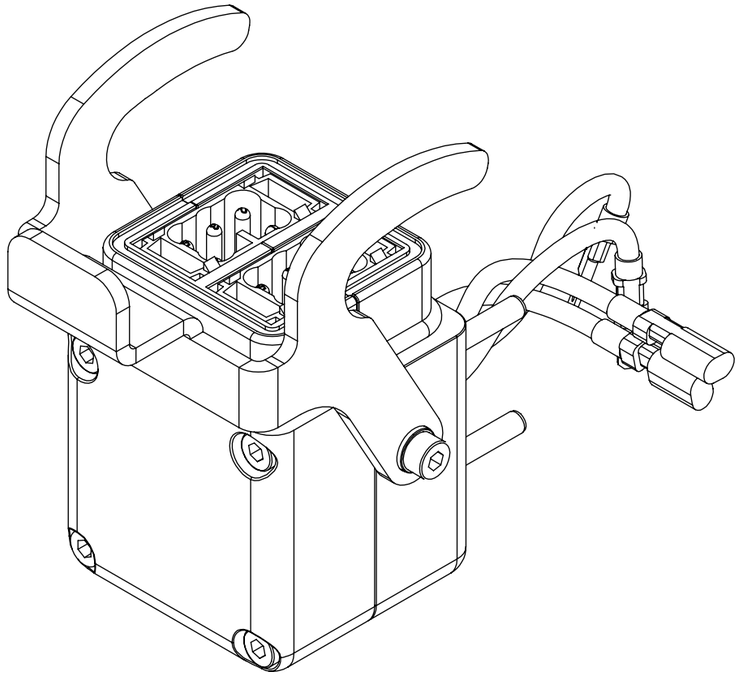

Assembled View

Assy. Number		A6400001
Assy. Description		Connector, Assembly, on Chassis, 24V
Date	2012-04-25	TRACTIVE
Revision		Gjutargatan 54 S-781 70 Borlänge
Drawn	KRT	Tel +46 243 22 11 55
Approved	AJ	Fax +46 243 22 11 80
Supercedes		www.tractive.se / www.pentruder.com

THIS DRAWING IS THE PROPERTY OF **Tractive AB**. ITS SUBMISSION DOES NOT INCLUDE OR CARRY THE RIGHT TO MAKE, USE OR SELL WHAT IS ILLUSTRATED WITHOUT THE WRITTEN CONSENT OF **Tractive AB**.

Scale	1:1	
Drawing Size	A3	SHEET 2 OF 2

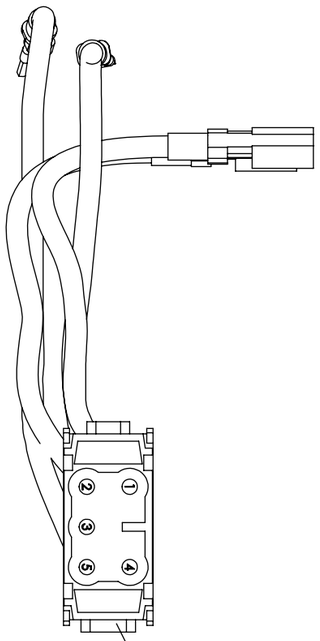

Rear

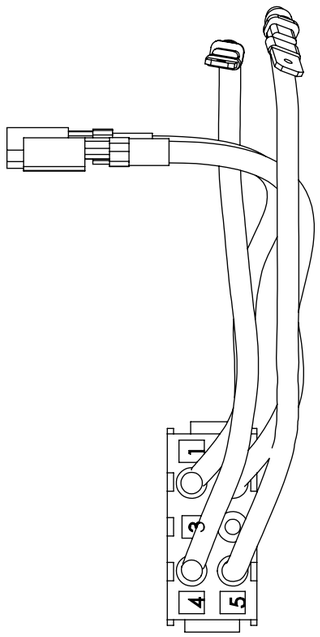

Front

64150400 Terminal block male, 5-pole

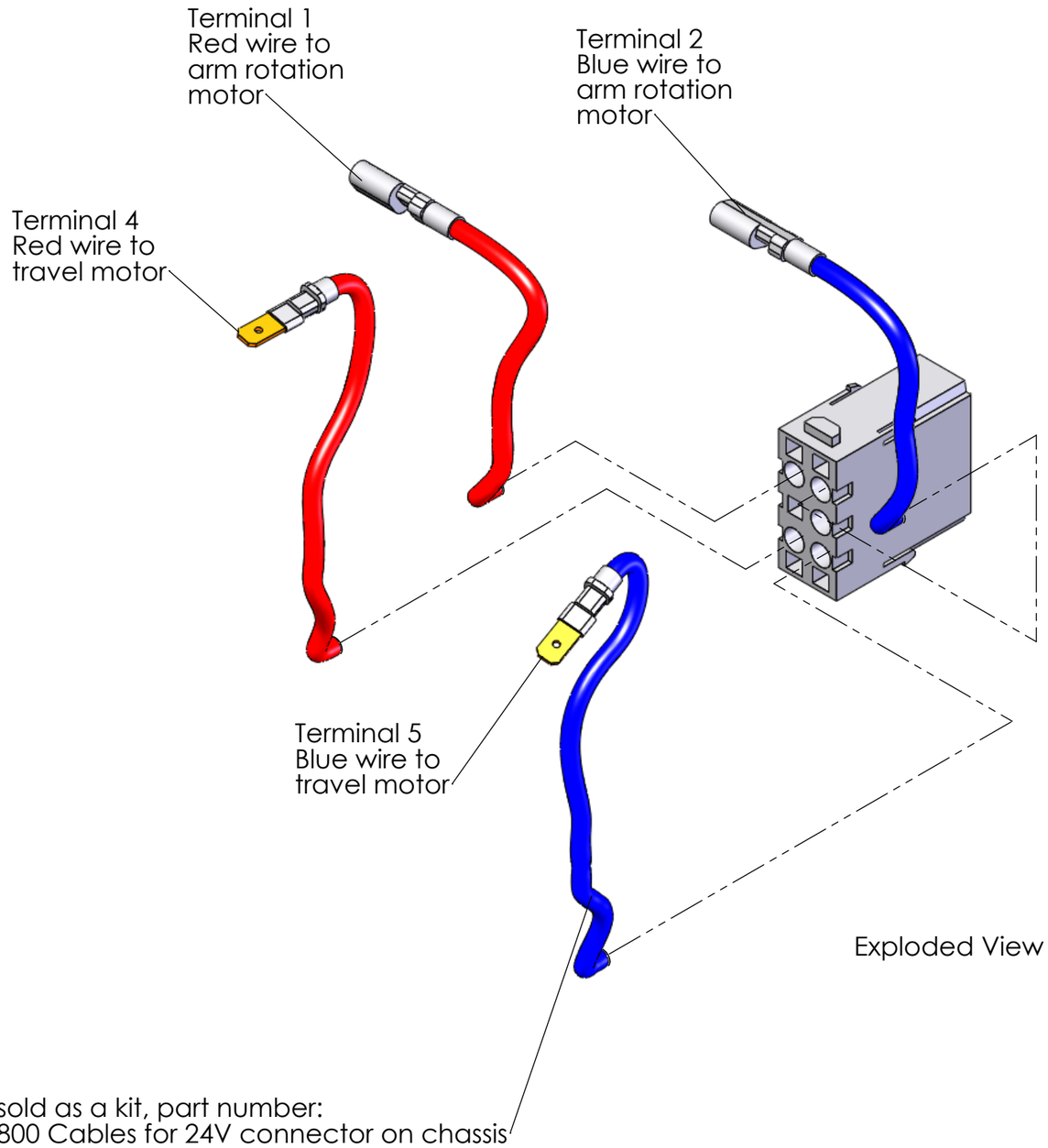

Wires sold as a kit, part number:
64100800 Cables for 24V connector on chassis

Assy. Number		A6400009
Assy. Description		Connector, assembly, on chassie
Date	2011-07-12	TRACTIVE
Revision	-	
Drawn	KRT	Gjutargatan 54 S-781 70 Borlänge Tel +46 243 22 11 55 Fax +46 243 22 11 80 www.tractive.se / www.pentruder.com
Approved		
Supercedes		

THIS DRAWING IS THE PROPERTY OF **Tractive AB**. ITS SUBMISSION DOES NOT INCLUDE OR CARRY THE RIGHT TO MAKE, USE OR SELL WHAT IS ILLUSTRATED WITHOUT THE WRITTEN CONSENT OF **Tractive AB**.

Scale	1:1	
Drawing Size	A3	SHEET 1 OF 1

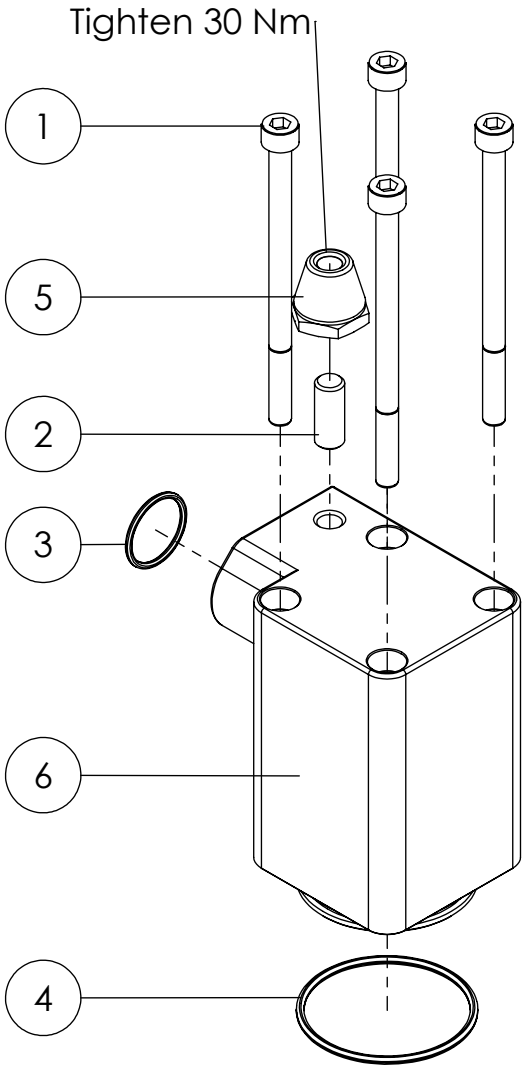

Exploded View

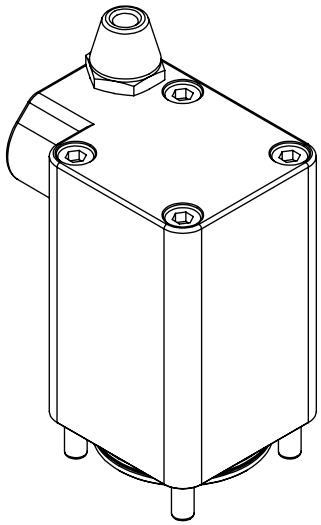

Assembled View

Preventative Maintenance					
ITEM NO.	PART/ASSY NUMBER	DESCRIPTION	QTY.	80h	160h
1	121006090-8.8A2	Allen Screw DIN912 M6 x 90 8.8A2	4		
2	14080700	Stud, M10 x 20	1		
3	23115019	O-ring 19 x 1.5 NBR 70	1		I
4	23120044	O-ring 44 x 2 NBR 70	1		I
5	40070100	Guide cone int. M8	1		
6	58281900	Cover, DC-motor, right, 8-20HF	1		
I=Inspect X=Replace					

Assy. Number		A5800003
Assy. Description		DC Motor Cover Assembly, Armrotation Mot
Date	2011-07-12	TRACTIVE
Revision	--05	
Drawn	KRT	Gjutargatan 54 S-781 70 Borlänge Tel +46 243 22 11 55 Fax +46 243 22 11 80 www.tractive.se / www.pentruder.com
Approved	AJ	
Supercedes		

THIS DRAWING IS THE PROPERTY OF **Tractive AB**. ITS SUBMISSION DOES NOT INCLUDE OR CARRY THE RIGHT TO MAKE, USE OR SELL WHAT IS ILLUSTRATED WITHOUT THE WRITTEN CONSENT OF **Tractive AB**.

Scale	1:2	
Drawing Size	A3	SHEET 2 OF 2

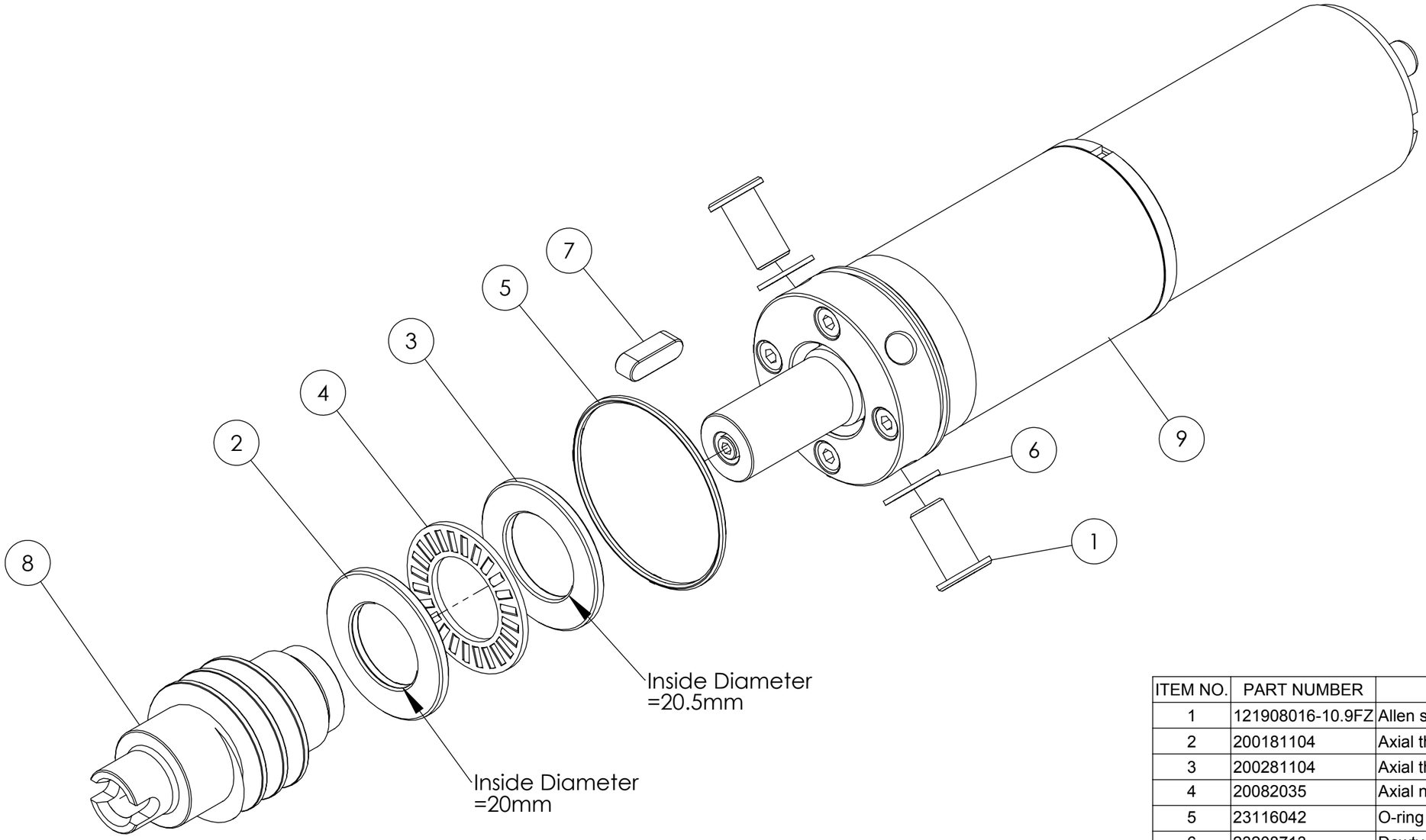

ITEM NO.	PART NUMBER	DESCRIPTION	QTY.
1	121908016-10.9FZ	Allen screw BN1206 M8 x 16 10.9Z	2
2	200181104	Axial thrust washer, WS 81104	1
3	200281104	Axial thrust washer, GS 81104	1
4	20082035	Axial needle roller bearing AXK2035	1
5	23116042	O-ring 42 x 1.6 NBR 70	1
6	23208713	Dowty washer, M8	2
7	29110516	Key 5 x 5 x 16	1
8	35500100	Worm screw	1
9	63104301	Matningsmotor 24V 43:1 kpl	1

Assy. Number		A6300001
Assy. Description		Arm feed motor, 24V, 43:1, assy
Date	2011-07-13	TRACTIVE
Revision	--03	Gjutargatan 54 S-781 70 Borlänge Tel +46 243 22 11 55 Fax +46 243 22 11 80 www.tractive.se / www.pentruder.com
Drawn	KRT	
Approved	AJ	
Supercedes		

THIS DRAWING IS THE PROPERTY OF **Tractive AB**. ITS SUBMISSION DOES NOT INCLUDE OR CARRY THE RIGHT TO MAKE, USE OR SELL WHAT IS ILLUSTRATED WITHOUT THE WRITTEN CONSENT OF **Tractive AB**.

Scale	1:1.5	
Drawing Size	A3	SHEET 1 OF 3

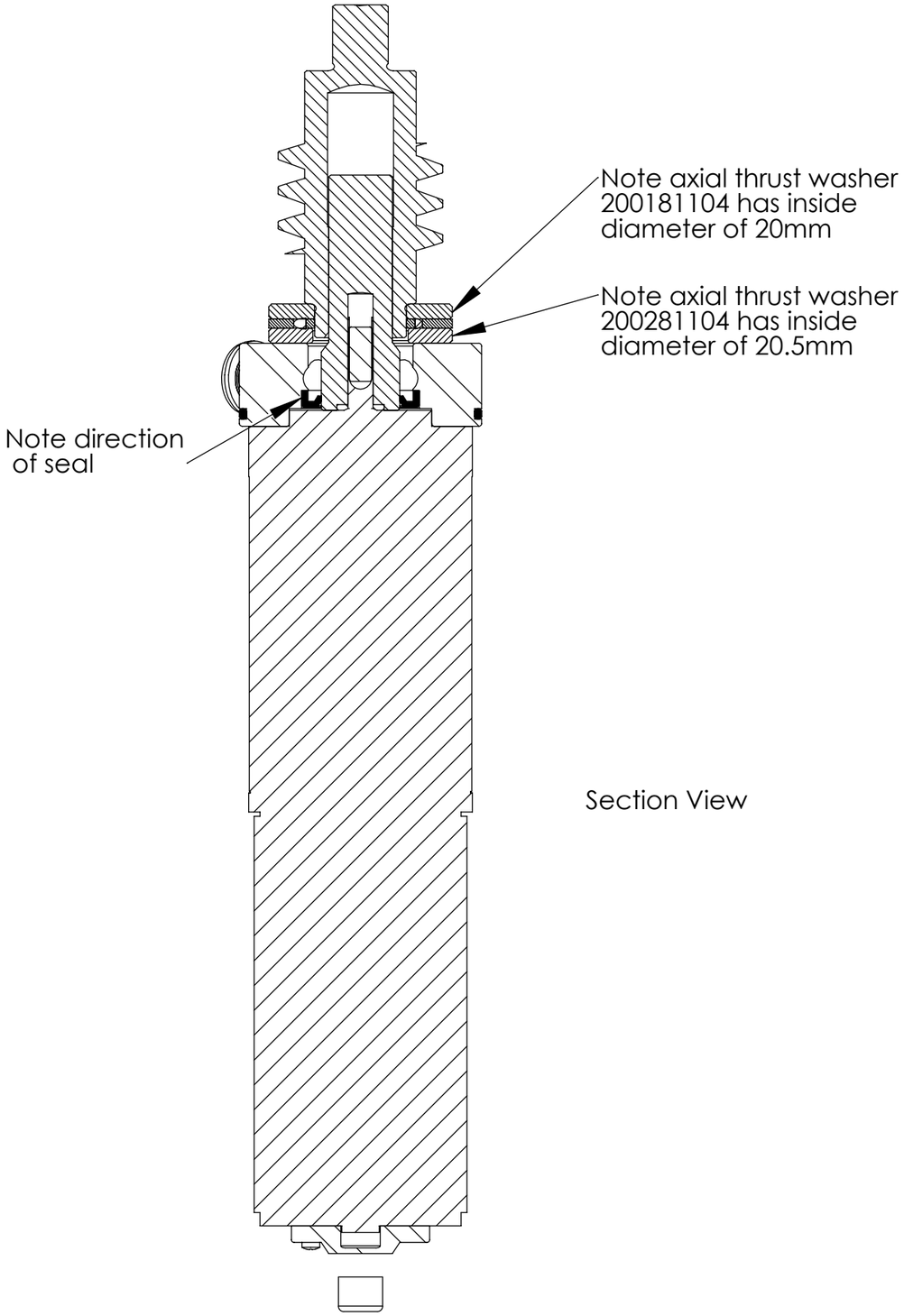

Section View

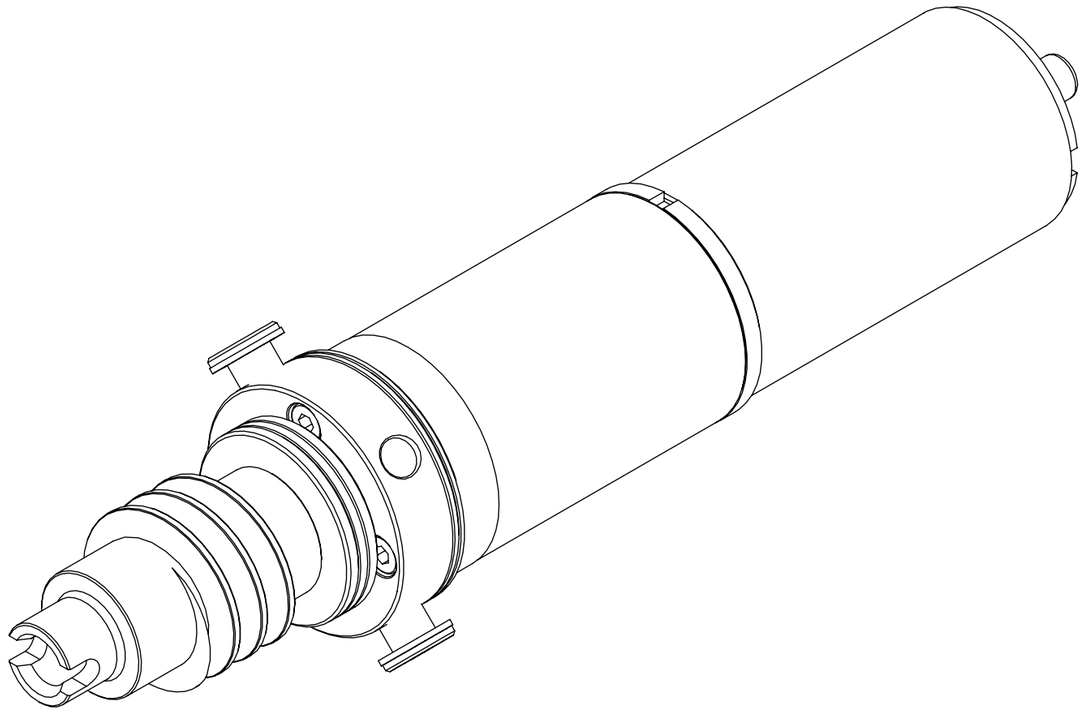

Assembled View

Assy. Number		A6300001
Assy. Description		Arm feed motor, 24V, 43:1, assy
Date	2011-07-13	TRACTIVE
Revision	--03	Gjutargatan 54 S-781 70 Borlänge
Drawn	KRT	Tel +46 243 22 11 55
Approved	AJ	Fax +46 243 22 11 80
Supercedes		www.tractive.se / www.pentruder.com

THIS DRAWING IS THE PROPERTY OF **Tractive AB**. ITS SUBMISSION DOES NOT INCLUDE OR CARRY THE RIGHT TO MAKE, USE OR SELL WHAT IS ILLUSTRATED WITHOUT THE WRITTEN CONSENT OF **Tractive AB**.

Scale	1:1	
Drawing Size	A3	SHEET 2 OF 3

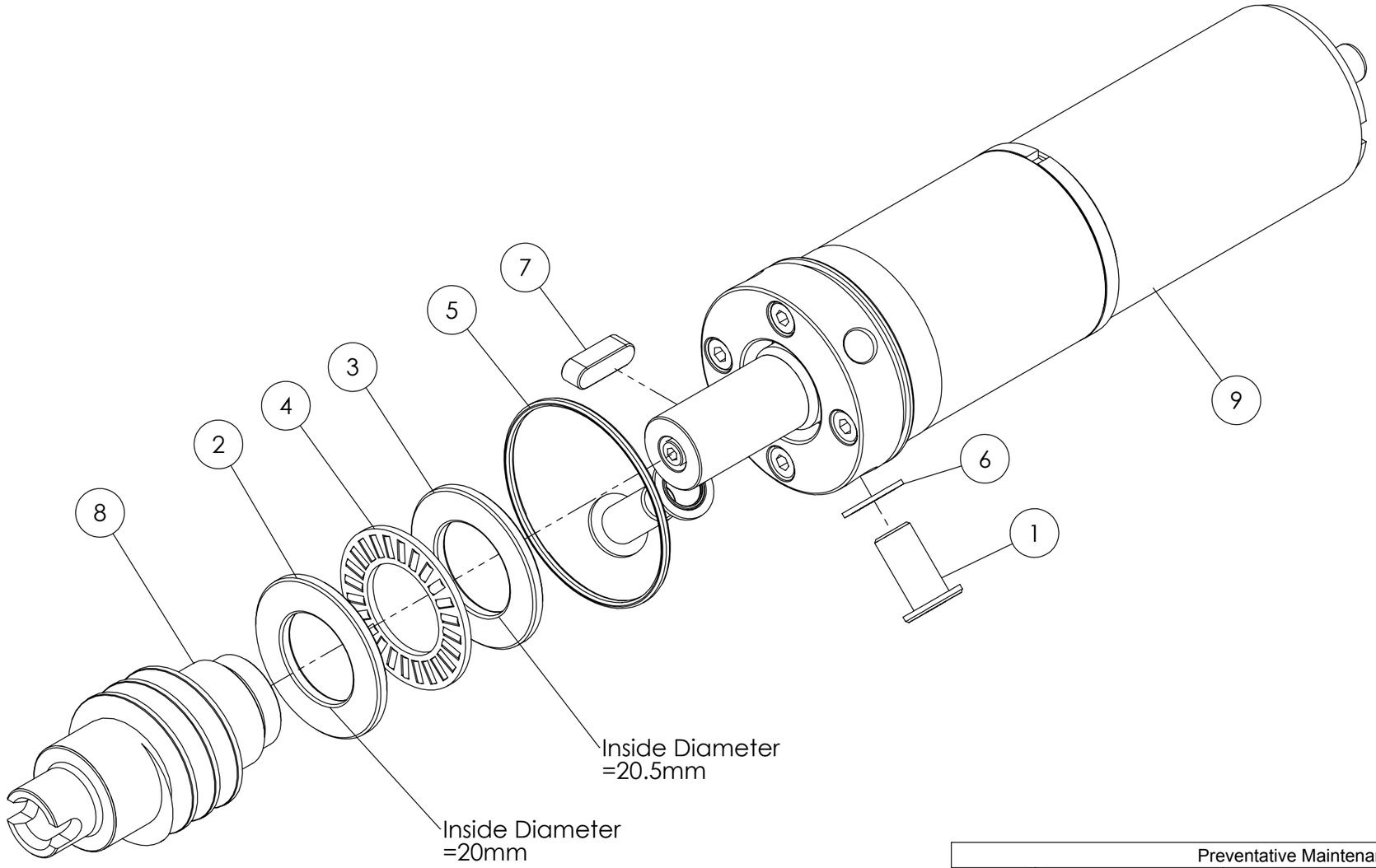

Preventative Maintenance					
ITEM NO.	PART/ASSY NUMBER	DESCRIPTION	QTY.	80h	160h
1	121908016-10.9FZ	Allen screw BN1206 M8 x 16 10.9Z	2		
2	200181104	Axial thrust washer, WS 81104	1		
3	200281104	Axial thrust washer, GS 81104	1		
4	20082035	Axial needle roller bearing AXK2035	1		I
5	23116042	O-ring 42 x 1.6 NBR 70	1		X
6	23208713	Dowty washer, M8	2		X
7	29110516	Key 5 x 5 x 16	1		
8	35500100	Worm screw	1		
9	63102101	Matningsmotor 24V 21:1 kpl	1		I
I=Inspect X=Replace					

Assy. Number		A6300002
Assy. Description		Travel motor 24V, 21:1 assy
Date	2011-07-13	TRACTIVE
Revision	--03	Gjutargatan 54 S-781 70 Borlänge Tel +46 243 22 11 55 Fax +46 243 22 11 80 www.tractive.se / www.pentruder.com
Drawn	KRT	
Approved	AJ	
Supercedes		
Scale	1:1.5	
Drawing Size	A3	SHEET 3 OF 3

THIS DRAWING IS THE PROPERTY OF **Tractive AB**. ITS SUBMISSION DOES NOT INCLUDE OR CARRY THE RIGHT TO MAKE, USE OR SELL WHAT IS ILLUSTRATED WITHOUT THE WRITTEN CONSENT OF **Tractive AB**.

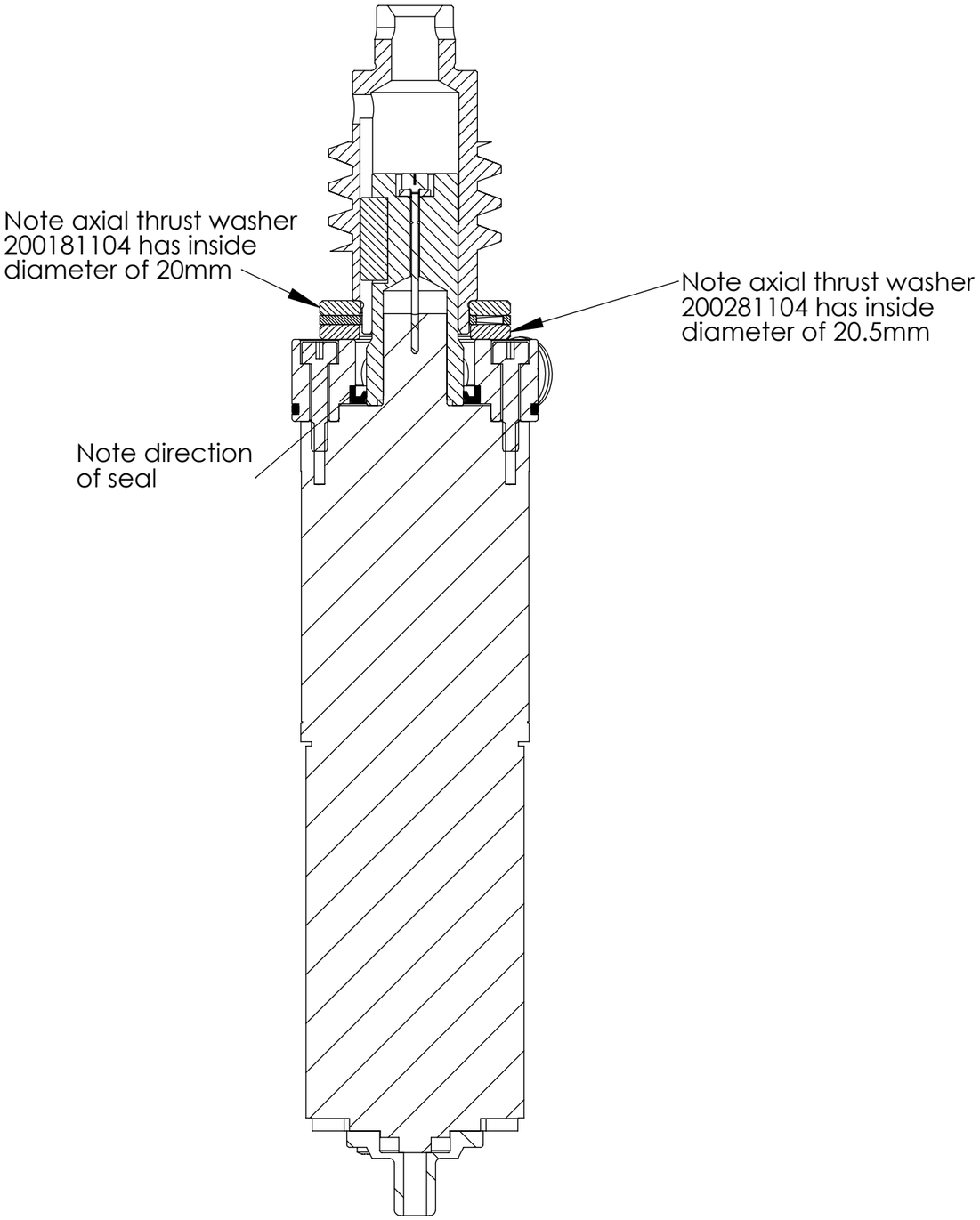

Section View

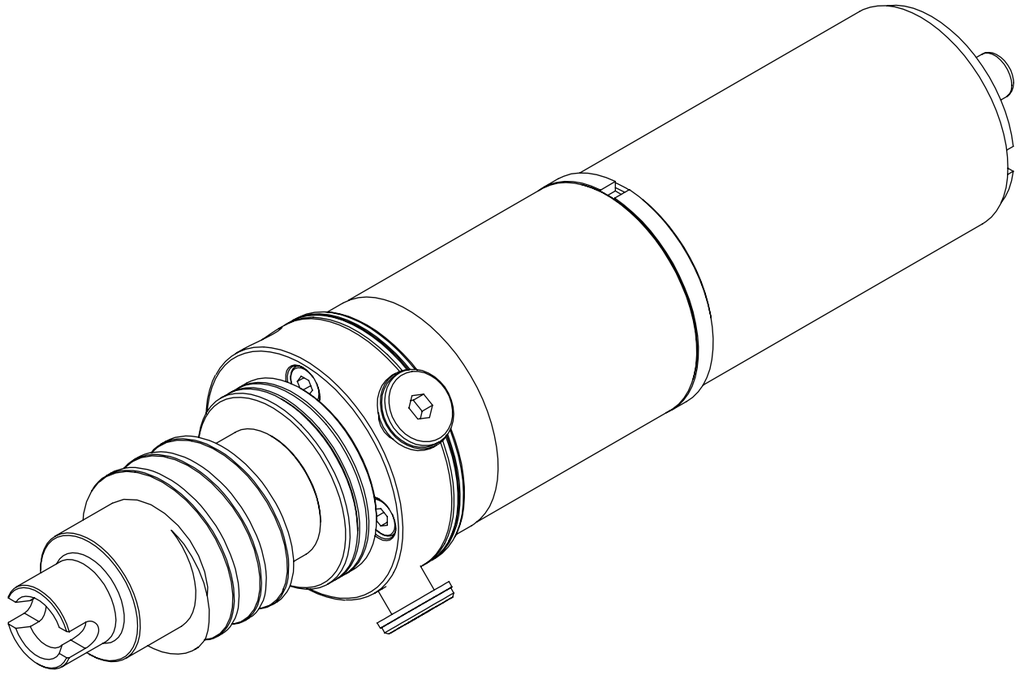

Assembled View

Assy. Number		A6300002
Assy. Description		Travel motor 24V, 21:1 assy
Date	2011-07-13	TRACTIVE
Revision	--03	
Drawn	KRT	Gjutargatan 54 S-781 70 Borlänge Tel +46 243 22 11 55 Fax +46 243 22 11 80 www.tractive.se / www.pentruder.com
Approved	AJ	
Supercedes		

THIS DRAWING IS THE PROPERTY OF **Tractive AB**. ITS SUBMISSION DOES NOT INCLUDE OR CARRY THE RIGHT TO MAKE, USE OR SELL WHAT IS ILLUSTRATED WITHOUT THE WRITTEN CONSENT OF **Tractive AB**.

Scale	1:1	
Drawing Size	A3	SHEET 2 OF 3

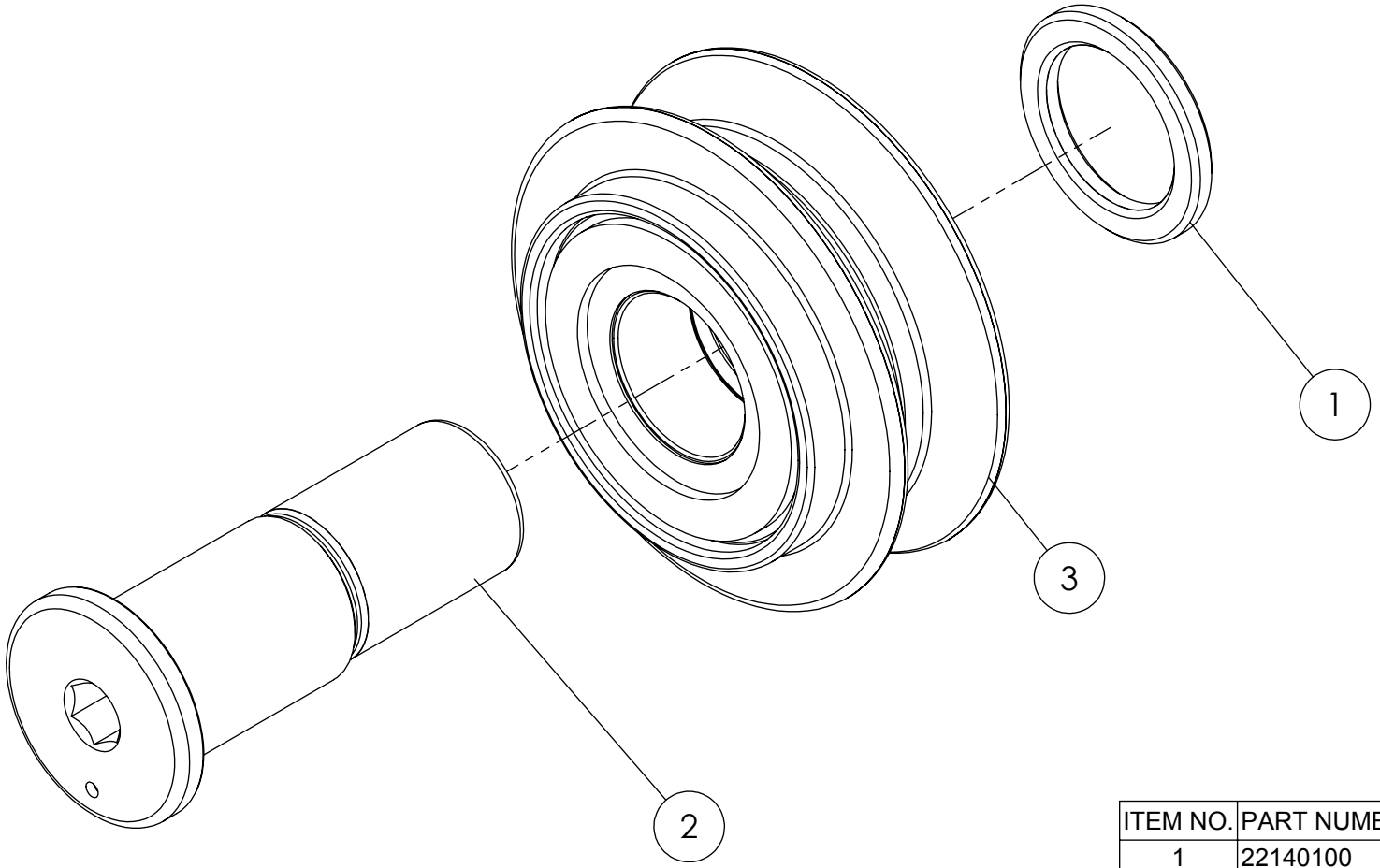

ITEM NO.	PART NUMBER	DESCRIPTION	QTY.
1	22140100	Spacer eccentric shaft.SLDPRT	1
2	34080100	Eccentric, adjustable	1
3	45010101	Track roller assembly	1

Assy. Number		A3400002
Assy. Description		Lower Track Roller Assembly
Date	2011-07-13	TRACTIVE
Revision	--05	
Drawn	KRT	Gjutargatan 54 S-781 70 Borlänge Tel +46 243 22 11 55 Fax +46 243 22 11 80 www.tractive.se / www.pentruder.com
Approved	AJ	
Supercedes		

THIS DRAWING IS THE PROPERTY OF **Tractive AB**. ITS SUBMISSION DOES NOT INCLUDE OR CARRY THE RIGHT TO MAKE, USE OR SELL WHAT IS ILLUSTRATED WITHOUT THE WRITTEN CONSENT OF **Tractive AB**.

Scale	1.5:1	
Drawing Size	A3	SHEET 1 OF 2

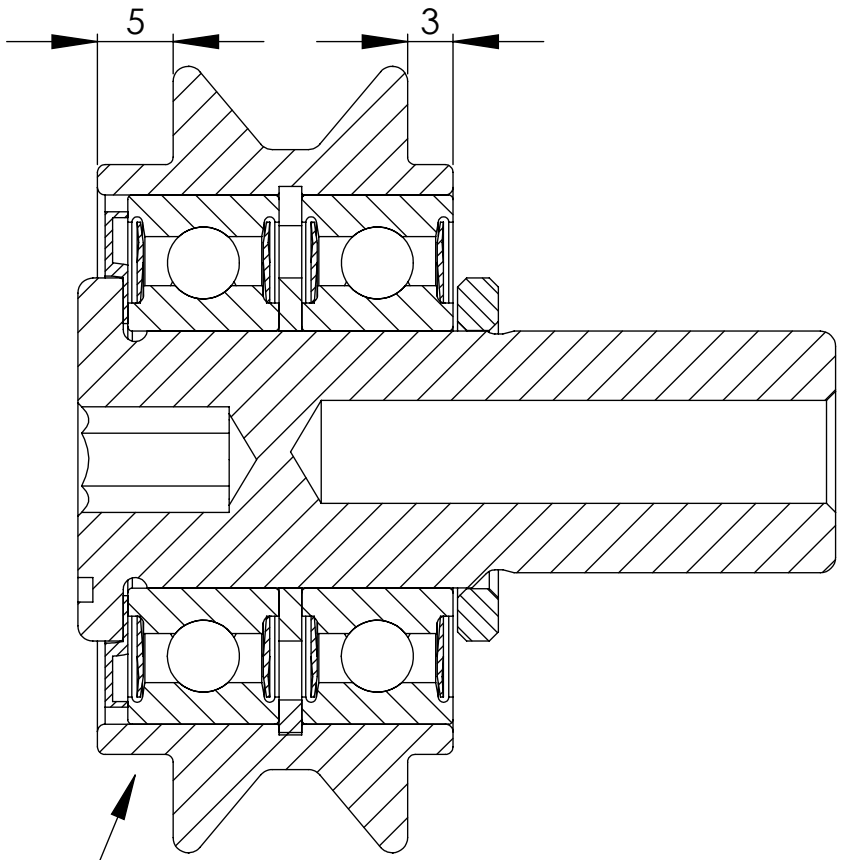

Section View

Note shoulder offset difference,
position 5MM offest outwards.

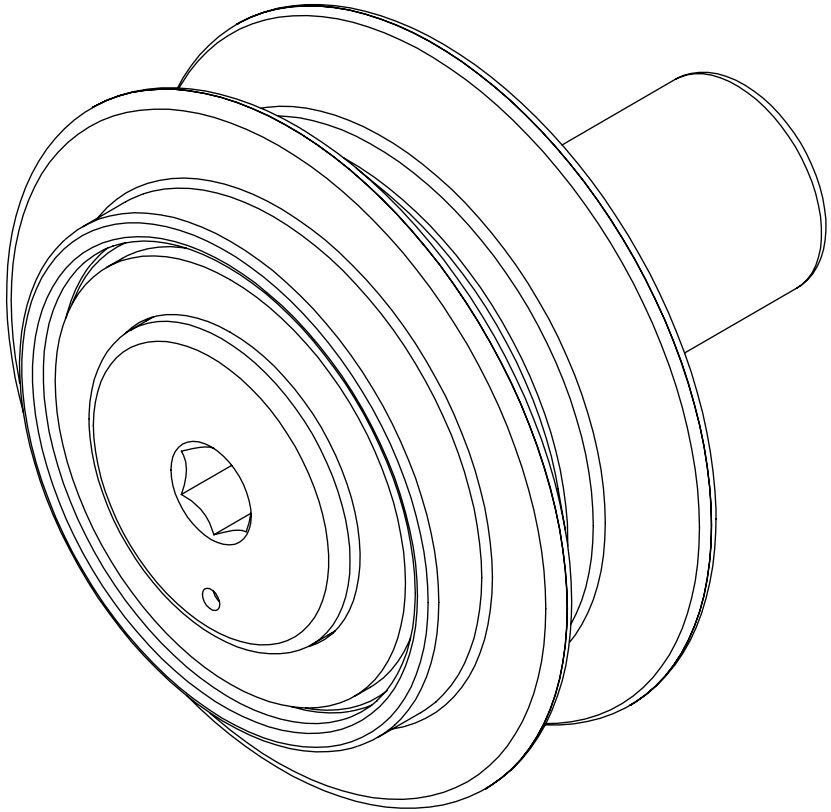

Assembled View

Assy. Number		A3400002	
Assy. Description		Lower Track Roller Assembly	
Date	2011-07-13	TRACTIVE	
Revision	01		
Drawn	KRT	Gjutargatan 54 S-781 70 Borlänge Tel +46 243 22 11 55 Fax +46 243 22 11 80 www.tractive.se / www.pentruder.com	
Approved	AJ		
Supercedes			
THIS DRAWING IS THE PROPERTY OF **Tractive AB**. ITS SUBMISSION DOES NOT INCLUDE OR CARRY THE RIGHT TO MAKE, USE OR SELL WHAT IS ILLUSTRATED WITHOUT THE WRITTEN CONSENT OF **Tractive AB**.		Scale	2:1
		Drawing Size	A3	SHEET 2 OF 2

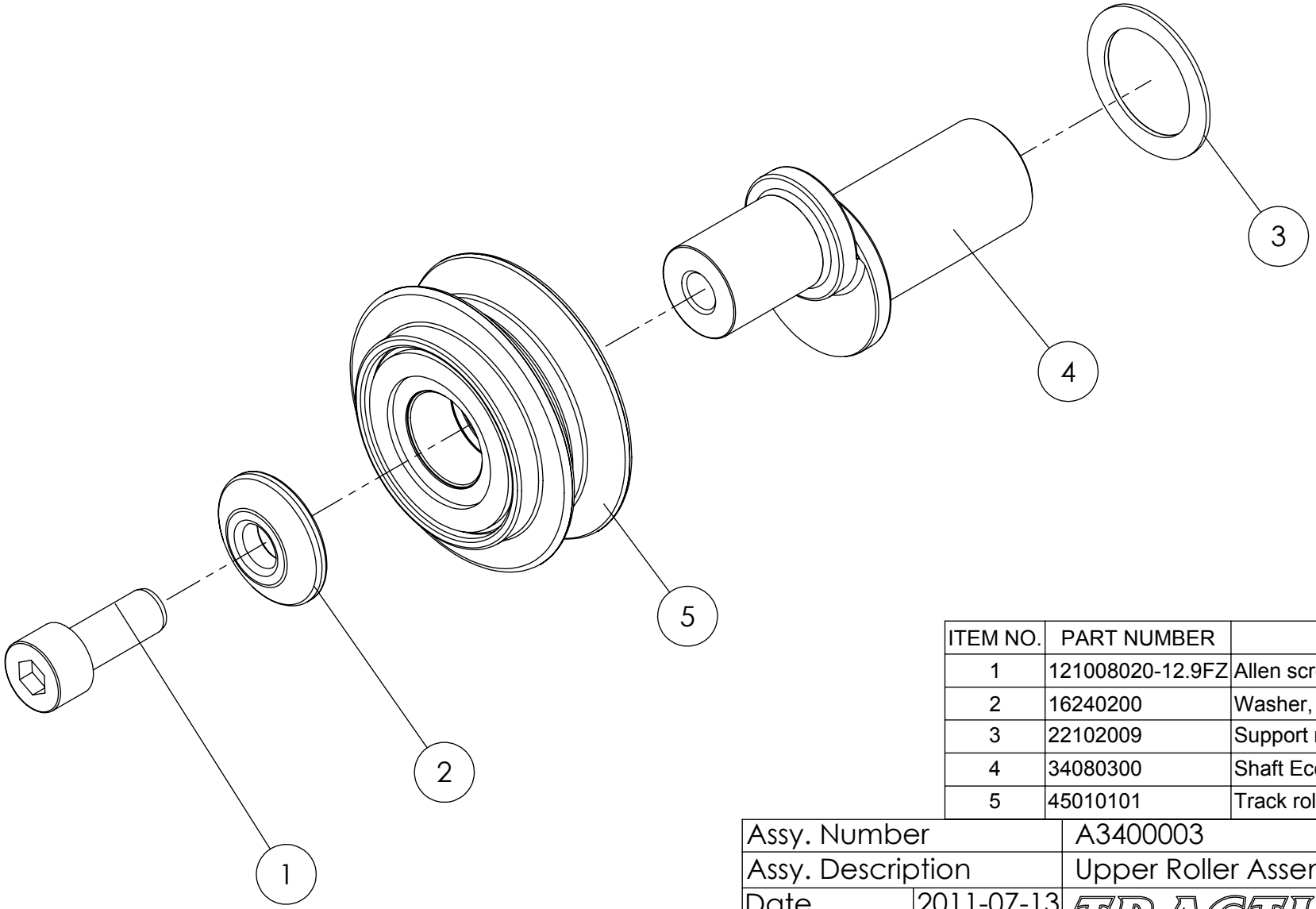

ITEM NO.	PART NUMBER	DESCRIPTION	QTY.
1	121008020-12.9FZ	Allen screw DIN912 M8 x 20 12.9Z	1
2	16240200	Washer, track roller	1
3	22102009	Support ring 20 x 28 x 0.9	1
4	34080300	Shaft Eccentric Locking 6-10/12 +HF	1
5	45010101	Track roller assembly	1

Assy. Number		A3400003
Assy. Description		Upper Roller Assembly
Date	2011-07-13	TRACTIVE
Revision	--02	
Drawn	KRT	Gjutargatan 54 S-781 70 Borlänge Tel +46 243 22 11 55 Fax +46 243 22 11 80 www.tractive.se / www.pentruder.com
Approved	AJ	
Supercedes		

THIS DRAWING IS THE PROPERTY OF **Tractive AB**. ITS SUBMISSION DOES NOT INCLUDE OR CARRY THE RIGHT TO MAKE, USE OR SELL WHAT IS ILLUSTRATED WITHOUT THE WRITTEN CONSENT OF **Tractive AB**.

Scale	1:1	
Drawing Size	A3	SHEET 1 OF 2

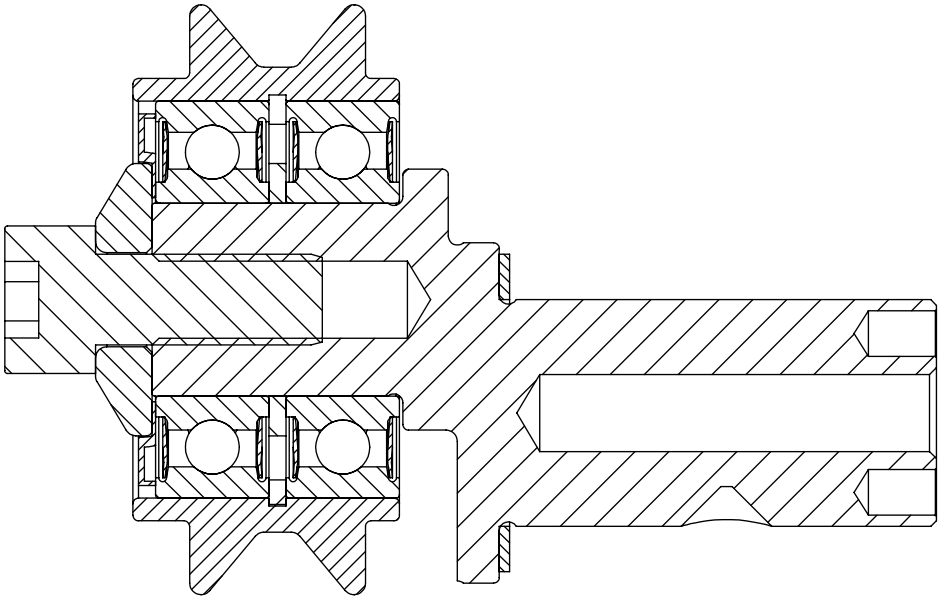

Section View

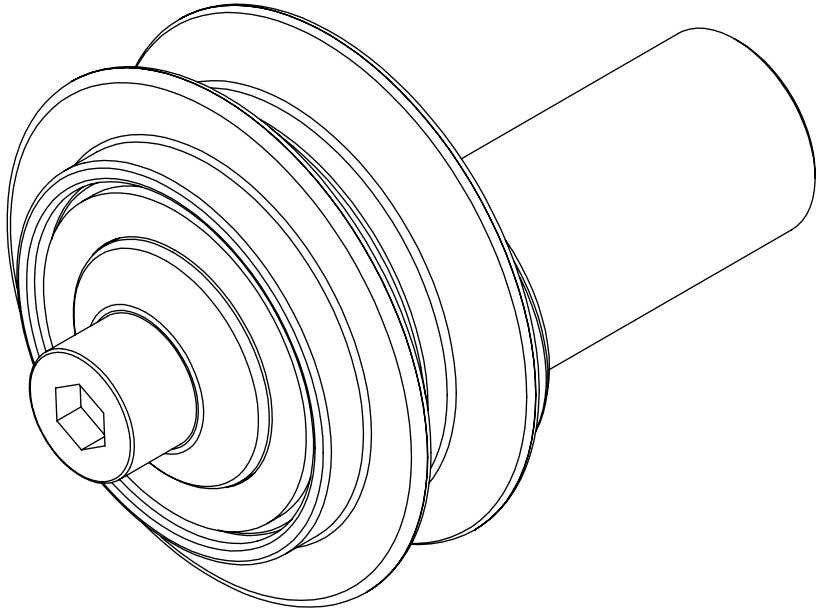

Assembled View

Assy. Number		A3400003
Assy. Description		Upper Roller Assembly
Date	2011-07-13	TRACTIVE
Revision	01	
Drawn	KRT	Gjutargatan 54 S-781 70 Borlänge Tel +46 243 22 11 55 Fax +46 243 22 11 80 www.tractive.se / www.pentruder.com
Approved	AJ	
Supercedes		

THIS DRAWING IS THE PROPERTY OF **Tractive AB**. ITS SUBMISSION DOES NOT INCLUDE OR CARRY THE RIGHT TO MAKE, USE OR SELL WHAT IS ILLUSTRATED WITHOUT THE WRITTEN CONSENT OF **Tractive AB**.

Scale	1.5:1	
Drawing Size	A3	SHEET 2 OF 2

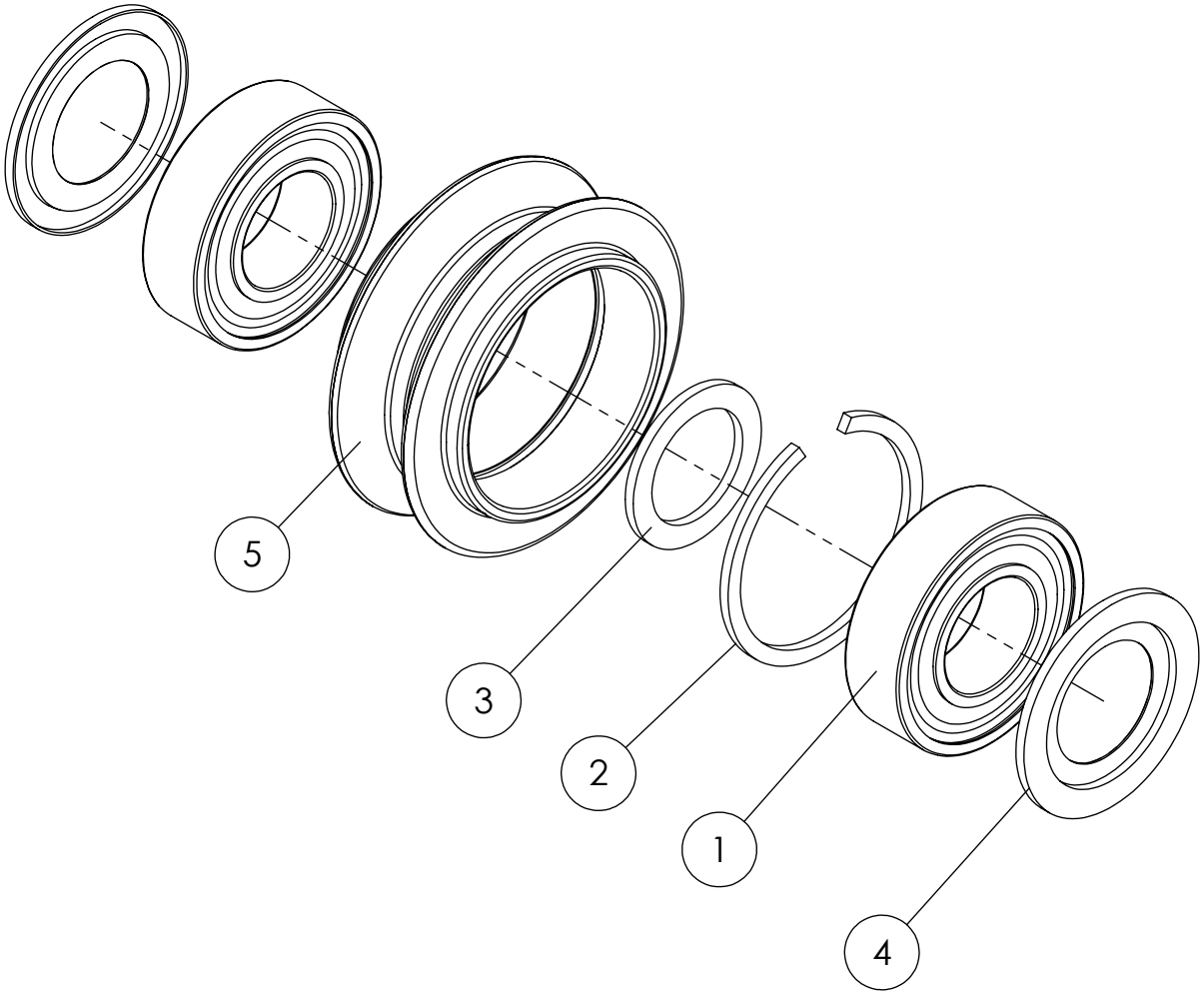

ITEM NO.	PART NUMBER	DESCRIPTION	QTY.
1	20756003	Radial support 6003-2RSH/C3	2
2	21300350	Circlip, SB35	1
3	22111715	Support ring 17 x 24 x 1.5 DIN988	1
4	23506003	Nilos seal 6003 AV	2
5	45010100	Track roller	1

Assy. Number	
Assy. Description	
Date	2011-07-12
Revision	--05
Drawn	
Approved	
Supercedes	

TRACTIVE
Gjutargatan 54 S-781 70 Borlänge
Tel +46 243 22 11 55
Fax +46 243 22 11 80
www.tractive.se / www.pentruder.com

THIS DRAWING IS THE PROPERTY OF **Tractive AB**. ITS SUBMISSION DOES NOT INCLUDE OR CARRY THE RIGHT TO MAKE, USE OR SELL WHAT IS ILLUSTRATED WITHOUT THE WRITTEN CONSENT OF **Tractive AB**.

Scale	1:1	
Drawing Size	A3	SHEET 1 OF 2

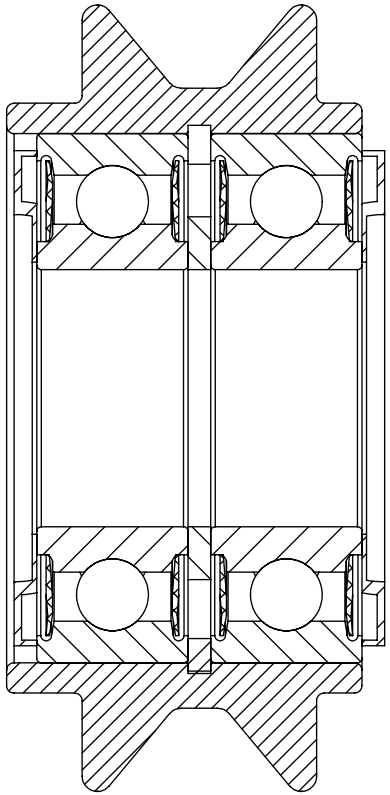

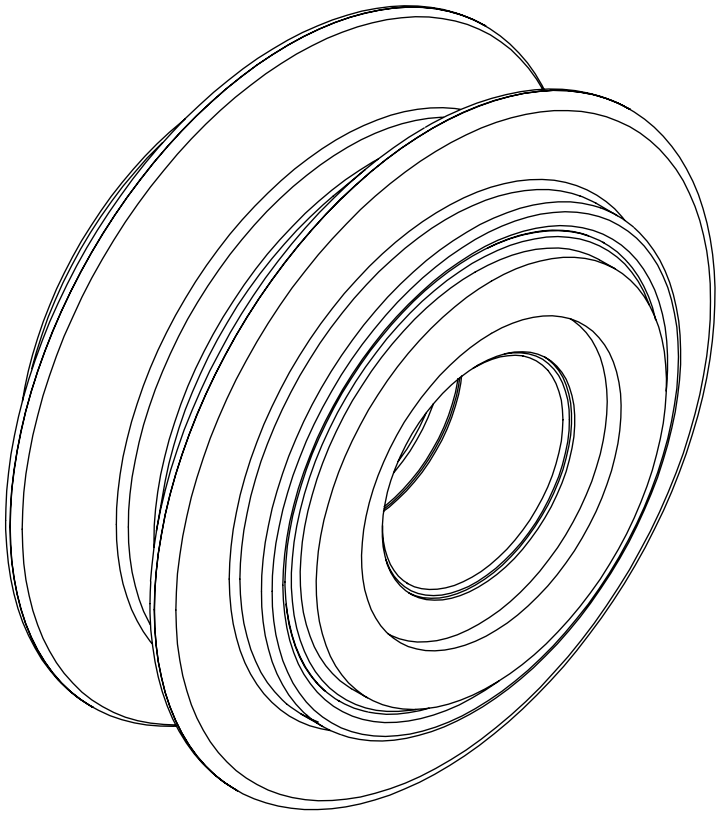

Assembled View

Assy. Number		
Assy. Description		
Date	2011-07-12	TRACTIVE
Revision	--05	
Drawn		Gjutargatan 54 S-781 70 Borlänge Tel +46 243 22 11 55 Fax +46 243 22 11 80 www.tractive.se / www.pentruder.com
Approved		
Supercedes		

THIS DRAWING IS THE PROPERTY OF **Tractive AB**. ITS SUBMISSION DOES NOT INCLUDE OR CARRY THE RIGHT TO MAKE, USE OR SELL WHAT IS ILLUSTRATED WITHOUT THE WRITTEN CONSENT OF **Tractive AB**.

Scale	2:1	
Drawing Size	A3	SHEET 2 OF 2

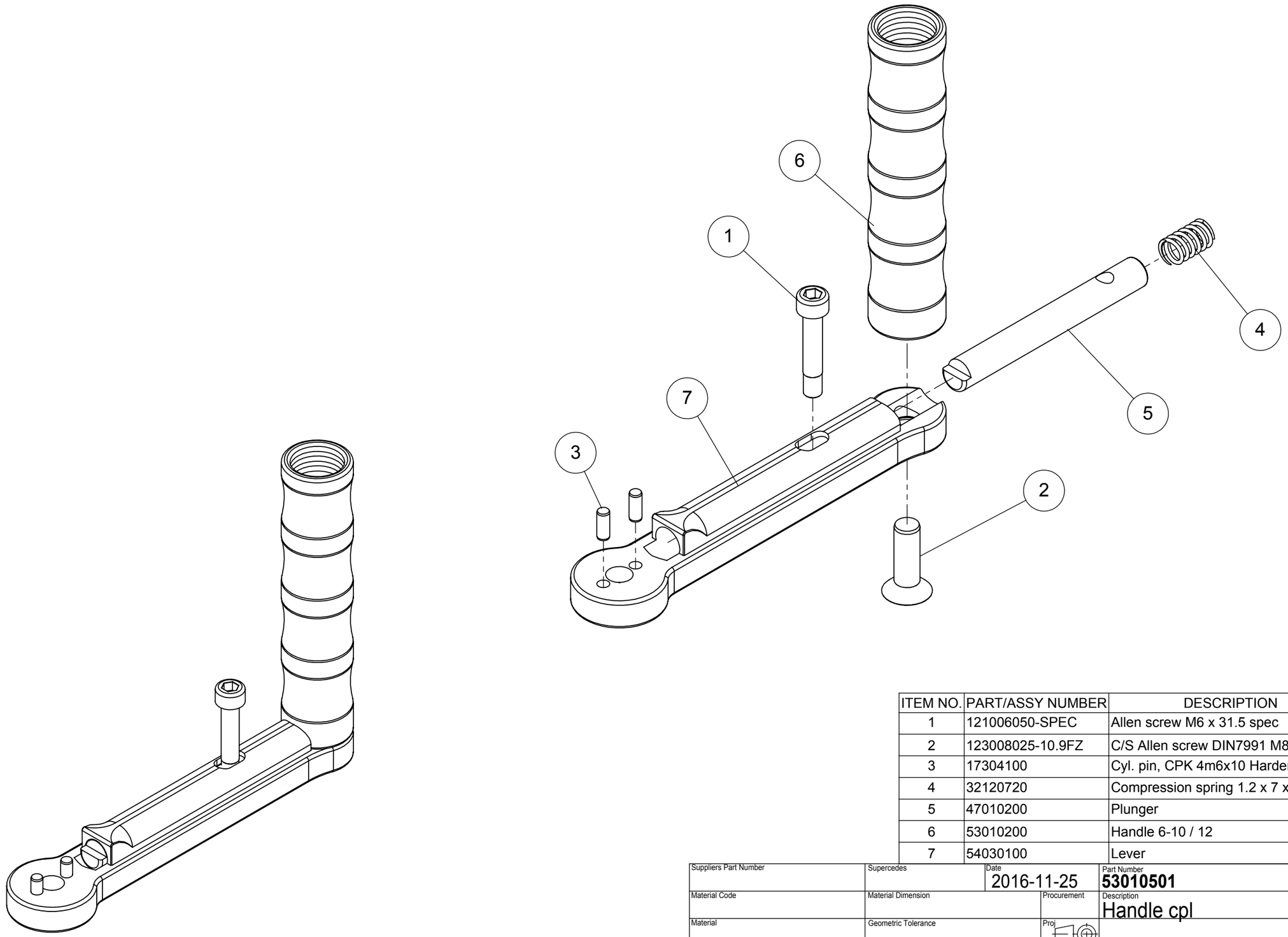

ITEM NO.	PART/ASSY NUMBER	DESCRIPTION	QTY.
1	121006050-SPEC	Allen screw M6 x 31.5 spec	1
2	123008025-10.9FZ	C/S Allen screw DIN7991 M8x25 10.9Z	1
3	17304100	Cyl. pin, CPK 4m6x10 Hardened	2
4	32120720	Compression spring 1.2 x 7 x 20	1
5	47010200	Plunger	1
6	53010200	Handle 6-10 / 12	1
7	54030100	Lever	1

Suppliers Part Number	Supercedes	Date 2016-11-25	Part Number **53010501**
Material Code	Material Dimension	Procurement	Description Handle cpl
Material	Geometric Tolerance	Proj	
Derived From	Scale 1:2 / Mass $PRP@Mass	Sheet 1/1	
Drawn by / Approved by / Designed by	THIS DRAWING IS THE PROPERTY OF Tractive AB. ITS SUBMISSION DOES NOT INCLUDE OR CARRY THE RIGHT TO MAKE, USE OR SELL WHAT IS ILLUSTRATED WITHOUT THE WRITTEN CONSENT OF Tractive AB.	Revision --00	TRACTIVE

Gjutargatan 54 S-781 70 Borlänge
Tel +46 243 22 11 55 Fax +46 243 22 11 80
www.tractive.se / www.pentruder.com

Dimensions in mm

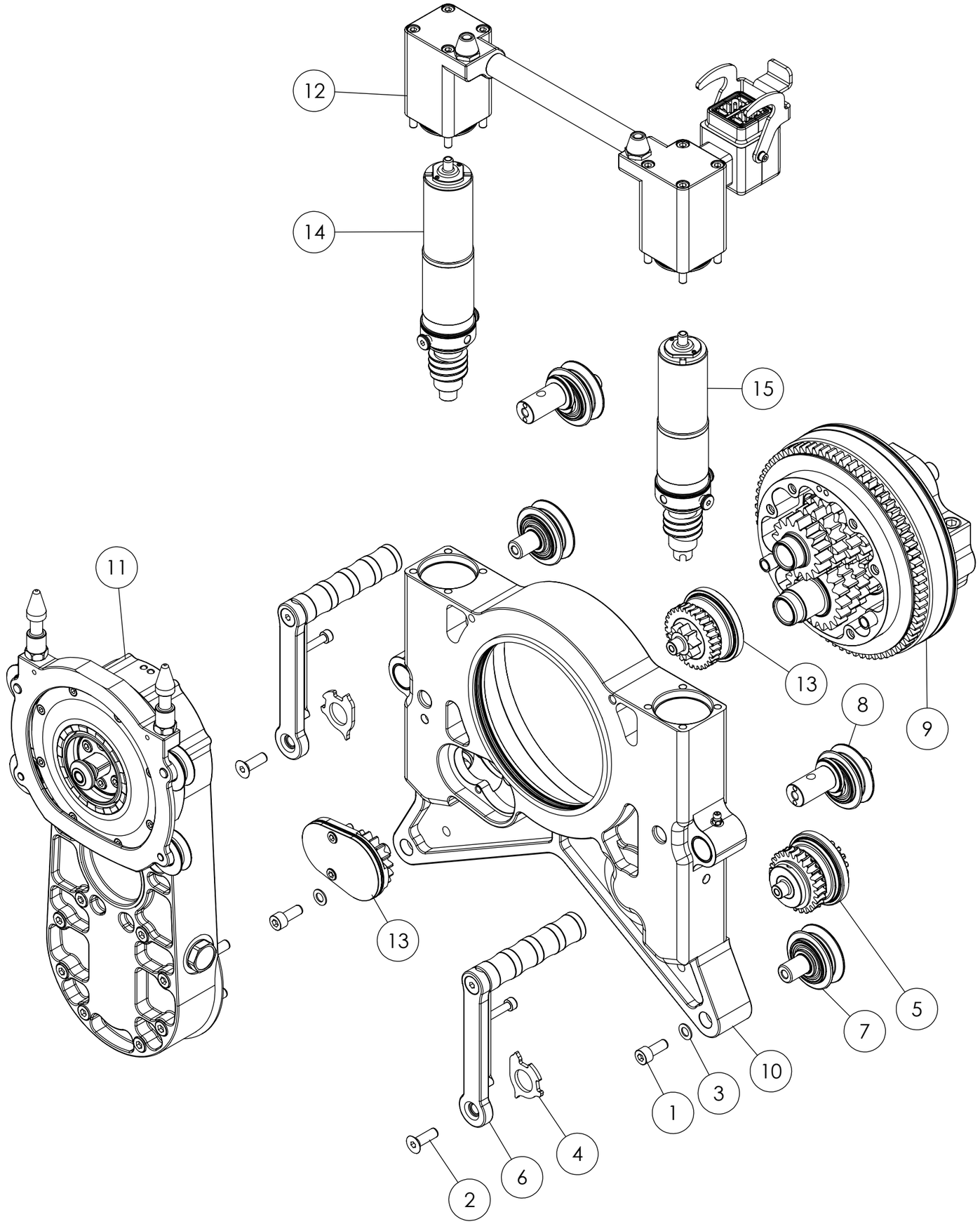

ITEM NO.	PART NUMBER	DESCRIPTION	QTY.
1	121008020-12.9FZ	Allen screw DIN912 M8 x 20 12.9Z	2
2	123008025-10.9FZ	C/S Allen screw DIN7991 M8x25 10.9Z	2
3	22110810	Support ring 8 x 14 x 1 DIN988	2
4	28010200	Locking slider 6-10 / 12	2
5	34160201	Travel pinion, assembly	1
6	53010501	Handle 6 - 10/12 and HF saws cpl	2
7	A3400002	Lower Track Roller Assembly	2
8	A3400003	Upper Roller Assembly	2
9	A5600006	Gearbox Assembly 8-20HF and IQ	1
10	A5600008	Chassis Assembly 8-20HF and iQ	1
11	A5600012	Arm Assy, 8-20iQ	1
12	A5800002	DC Motor Cover Assembly	1
13	A5800005	Gear Drive Assembly, Arm Rotation	1
14	A6300001	Arm feed motor, 24V, 43:1, assy	1
15	A6300002	Travel motor 24V, 21:1 assy	1

Assy. Number		8-20IQ Assy-NEW CHASSIS
Assy. Description		8-20iQ Assy-NEW CHASSIS
Date	2011-06-28	TRACTIVE
Revision	--00	Gjutargatan 54 S-781 70 Borlänge Tel +46 243 22 11 55 Fax +46 243 22 11 80 www.tractive.se / www.pentruder.com
Drawn	KRT	
Approved	AJ	
Supercedes		

THIS DRAWING IS THE PROPERTY OF **Tractive AB**. ITS SUBMISSION DOES NOT INCLUDE OR CARRY THE RIGHT TO MAKE, USE OR SELL WHAT IS ILLUSTRATED WITHOUT THE WRITTEN CONSENT OF **Tractive AB**.

Scale	1:4	
Drawing Size	A3	SHEET 1 OF 2

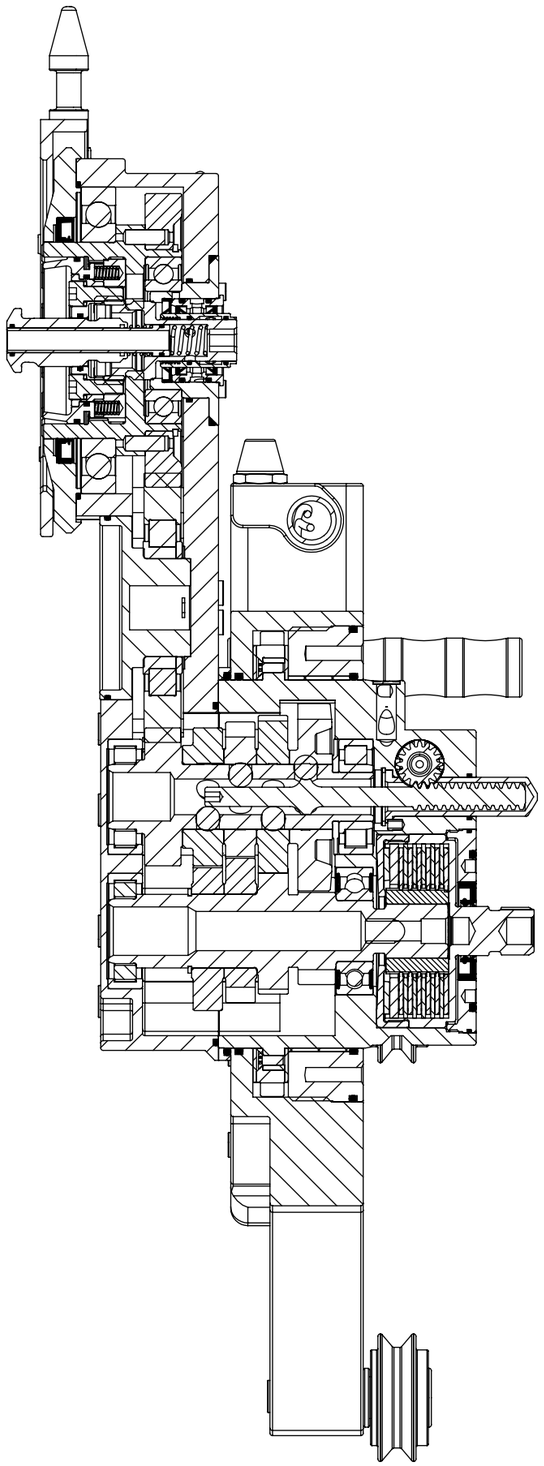

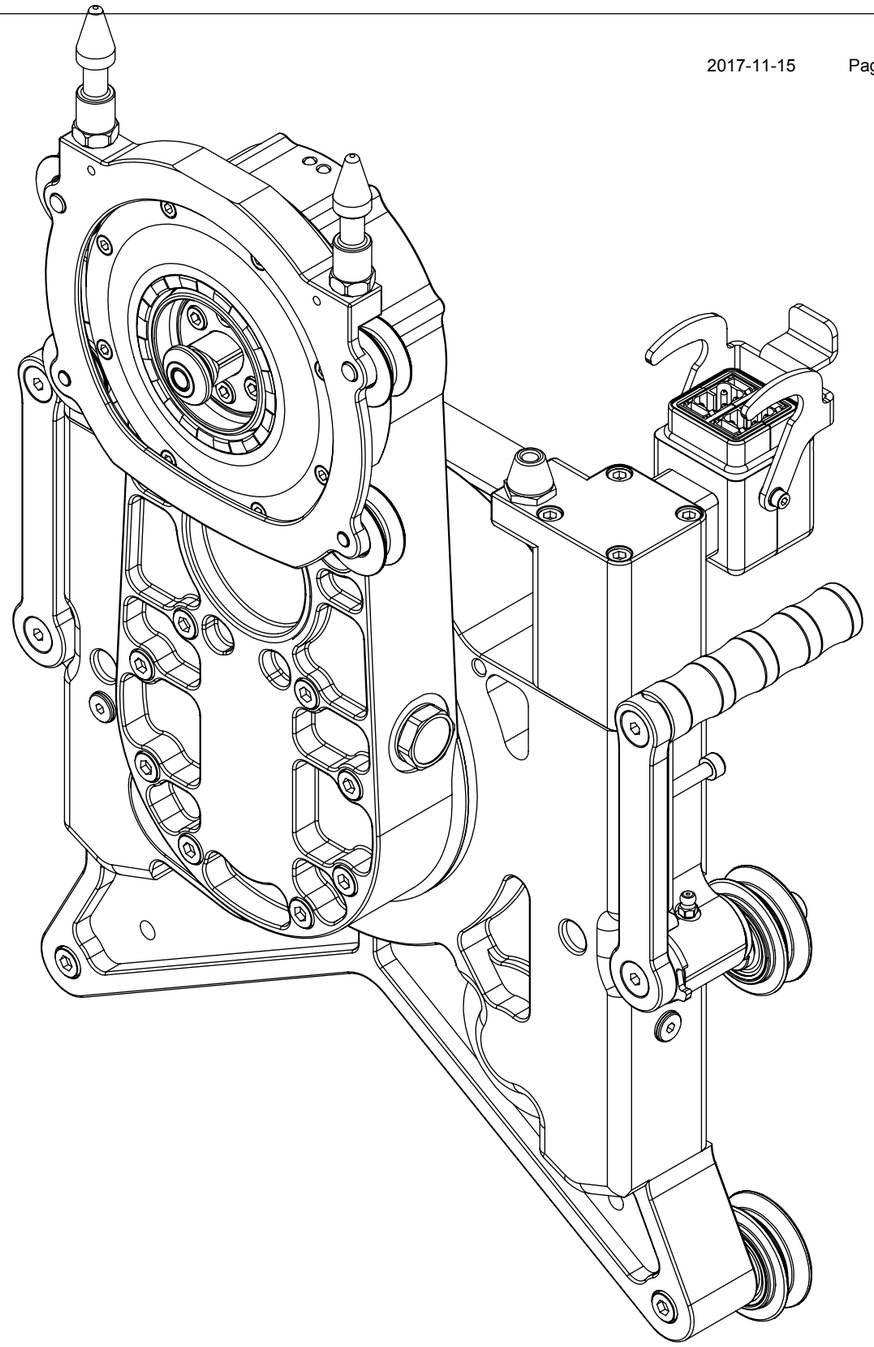

Assy. Number		8-20IQ Assy-NEW CHASSIS
Assy. Description		8-20iQ Assy-NEW CHASSIS
Date	2011-06-28	TRACTIVE
Revision	--00	
Drawn	KRT	Gjutargatan 54 S-781 70 Borlänge Tel +46 243 22 11 55 Fax +46 243 22 11 80 www.tractive.se / www.pentruder.com
Approved	AJ	
Supercedes		

THIS DRAWING IS THE PROPERTY OF **Tractive AB**. ITS SUBMISSION DOES NOT INCLUDE OR CARRY THE RIGHT TO MAKE, USE OR SELL WHAT IS ILLUSTRATED WITHOUT THE WRITTEN CONSENT OF **Tractive AB**.

Scale	1:2.5	
Drawing Size	A3	SHEET 2 OF 2

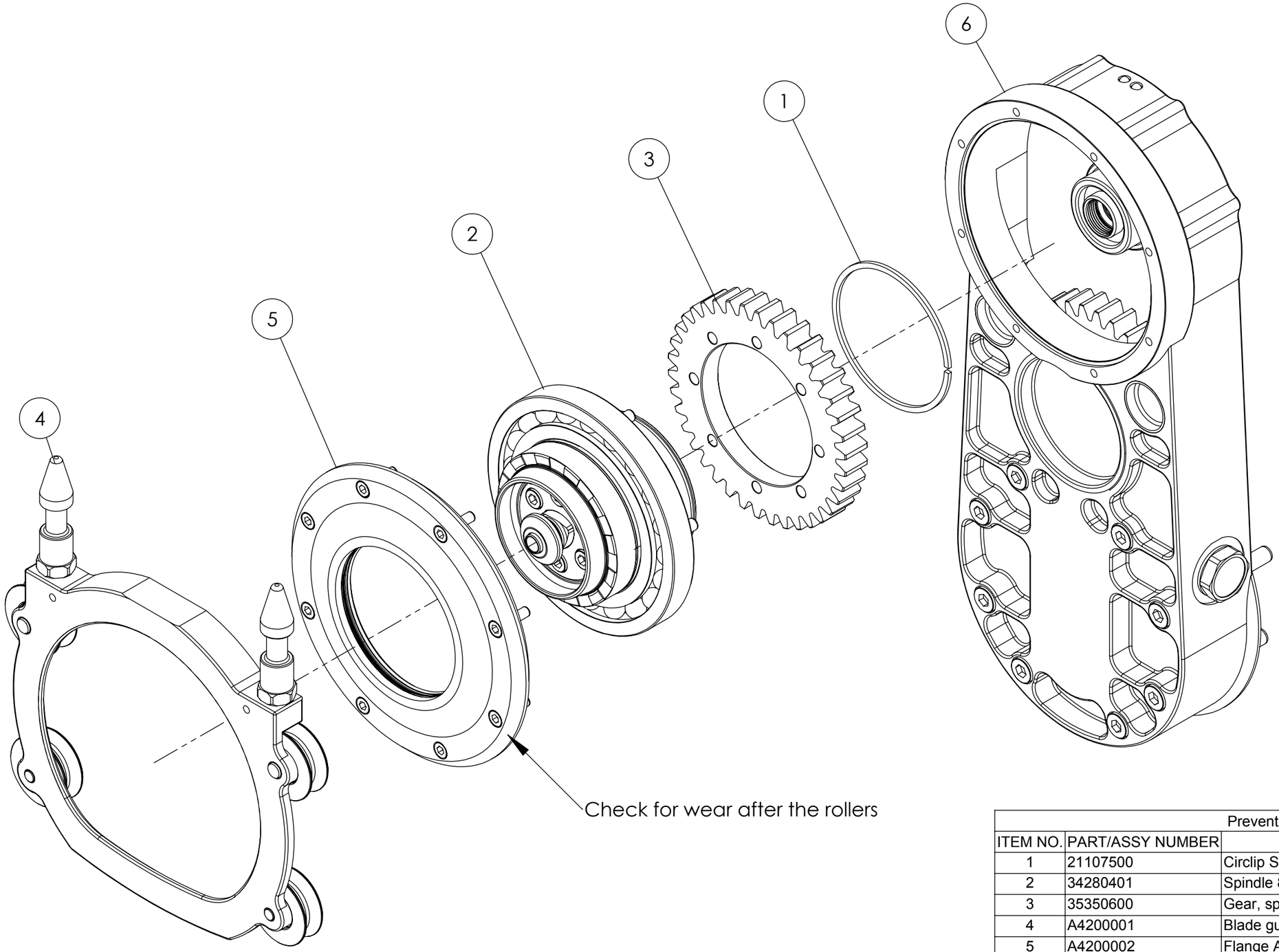

Preventative Maintenance					
ITEM NO.	PART/ASSY NUMBER	DESCRIPTION	QTY	80h	160h
1	21107500	Circlip SW75	1		
2	34280401	Spindle 8 - 20 cpl	1	I	I
3	35350600	Gear, spindle, 38T	1		
4	A4200001	Blade guard rotary flange	1		
5	A4200002	Flange Assembly, tapered, blade guard holder	1		I
6	A5600013	Arm Housing Assembly, 8-20iQ	1		
I=Inspect X=Replace					

Assy. Number		A5600012
Assy. Description		Arm Assy, 8-20iQ
Date	2011-08-15	TRACTIVE
Revision	--03	
Drawn	KRT	Gjutargatan 54 S-781 70 Borlänge Tel +46 243 22 11 55 Fax +46 243 22 11 80 www.tractive.se / www.pentruder.com
Approved	AJ	
Supercedes		

THIS DRAWING IS THE PROPERTY OF **Tractive AB**. ITS SUBMISSION DOES NOT INCLUDE OR CARRY THE RIGHT TO MAKE, USE OR SELL WHAT IS ILLUSTRATED WITHOUT THE WRITTEN CONSENT OF **Tractive AB**.

Scale	1:2.5	
Drawing Size	A3	SHEET 3 OF 3

Rev.	Note	Date	Rev. By	Appr. By
A	Pos 7 changed to correct one.	2017-12-13	JG	JG

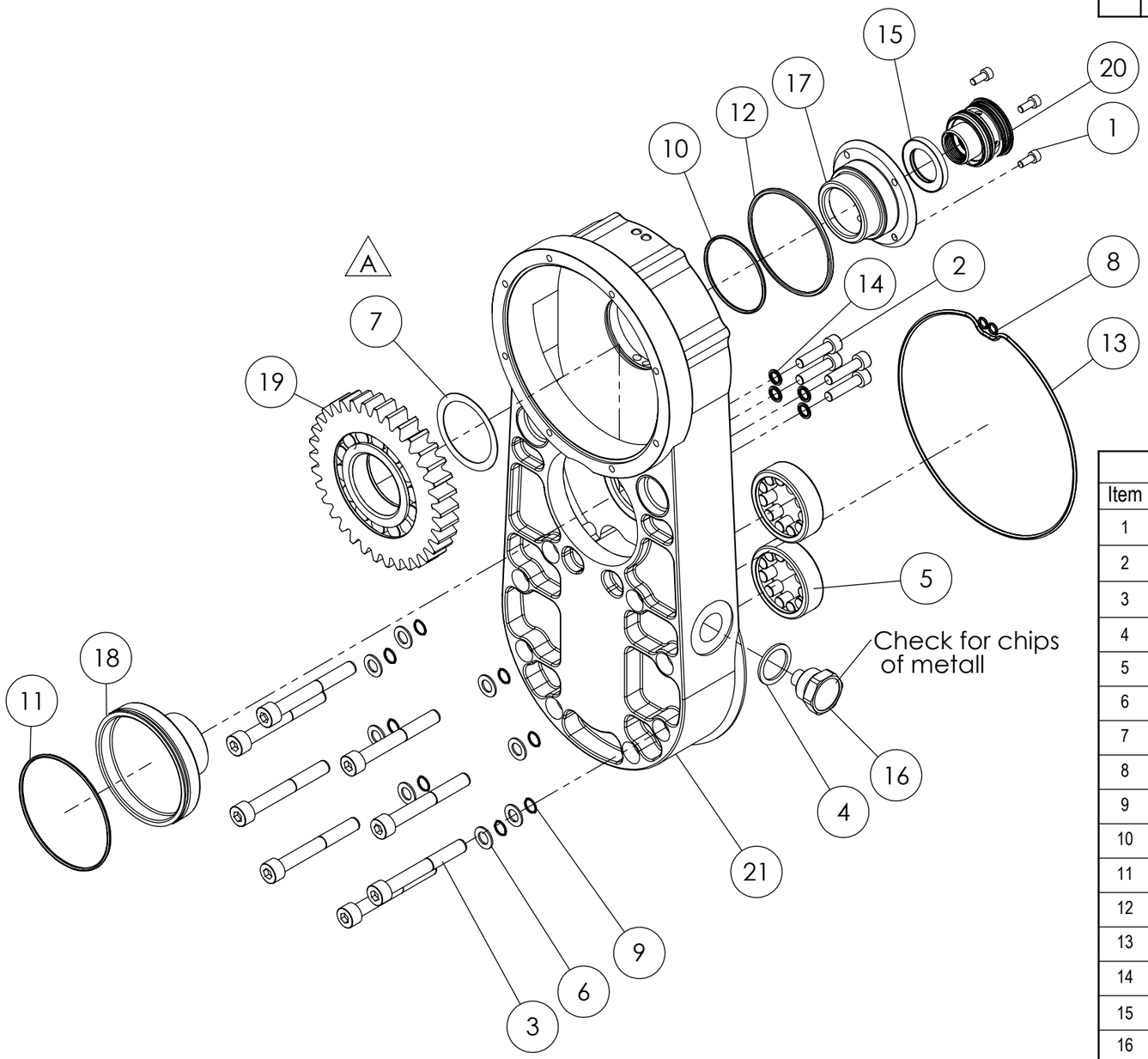

Preventative Maintenance

Item	Qty	Part No.	Description	Note	80h	160h
1	4	121004010-12.9FZ	Allen screw DIN912 M4 x 10 12.9Z			
2	4	121006025-12.9FZ	Allen Screw DIN912 M6 x 25 12.9Z			
3	8	121008065-12.9FZ	Allen screw DIN912 M8 x 65 12.9Z			
4	1	16352026	Alu-washer 20 x 26 x 1.5		X	X
5	2	20160204	Cylindrical roller bearing, NU 204 ECP			I
6	8	22110810	Support ring 8 x 14 x 1 DIN988			
7	1	22114005	Support ring 40 x 50 x 0.5 DIN988			
8	2	23112005	O-ring 5 x 1.20 NBR 70			X
9	8	23112008	O-ring 8 x 1.25 NBR 70			X
10	1	23120048	O-ring 48 x 2 NBR 70			X
11	1	23120070	O-ring 70 x 2 NBR 70			X
12	1	23125064	O-ring 64 x 2.5 NBR 70			X
13	1	23125144	O-ring 144 x 2.5 NBR 70			X
14	4	23206710	Dowty Washer 6.7 x 10 x 1 M6			X
15	1	24002203404	Radial seal 22 x 34 x 4			X
16	1	25032015	Magnetic plug M20 x 1.5		I	I
17	1	34040400	Swivel housing			
18	1	34210200	Intermediate gear shaft			
19	1	35371801	Intermediate gear arm 34T NUP208cpl			I
20	1	57210501	Water Seal Housing wall saw cpl v3		I	I
21	1	A5600014	Housing Assy, 8-20IQ			

I=Inspect X=Replace

Material		Description: Arm Housing Assembly, 8-20iQ			
Geometric Tolerance	Sheet 3/3	Mass in Gram	Dim.in mm	Note	
TRACTIVE		Date	Proj	Part Number: A5600013	Revision: A
		Drawn by	Designed by: JG	Scale: 1:3	

Approved

Model: A5600013 Rev. A

Tractive AB
Gjutargatan 54 S-781 70 Borlänge
Tel +46 243 22 11 55 www.tractive.se

This drawing is the property of Tractive AB. Its submission does not include or carry the right to make, use or sell what is illustrated without the written consent of Tractive AB.

Rev.	Note	Date	Rev. By	Appr. By
A	Pos 7 changed to correct one.	2017-12-13	JG	JG

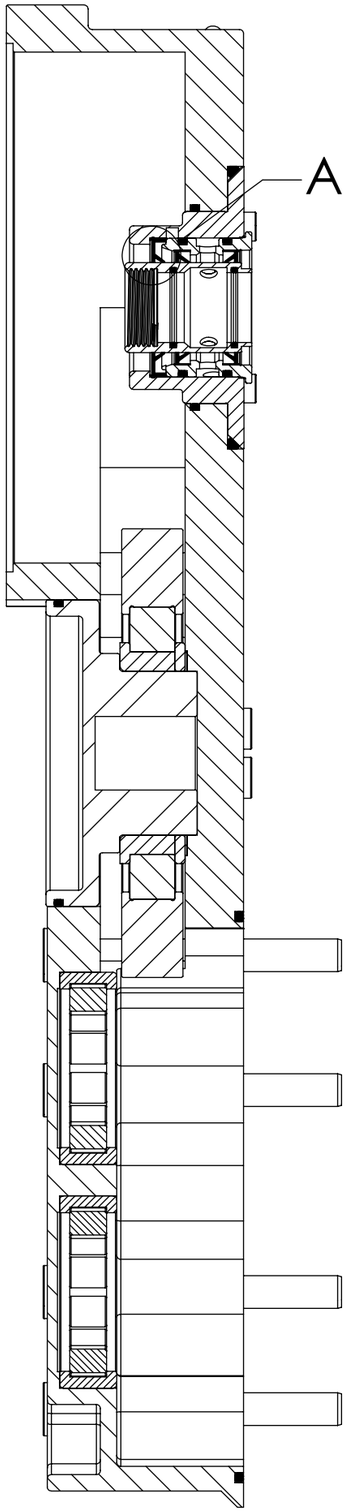

Section View

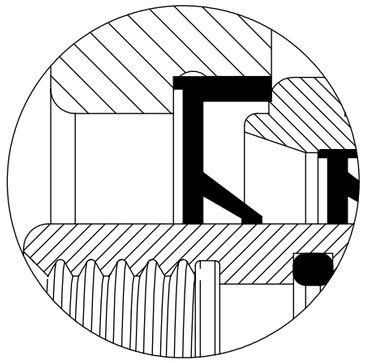

A

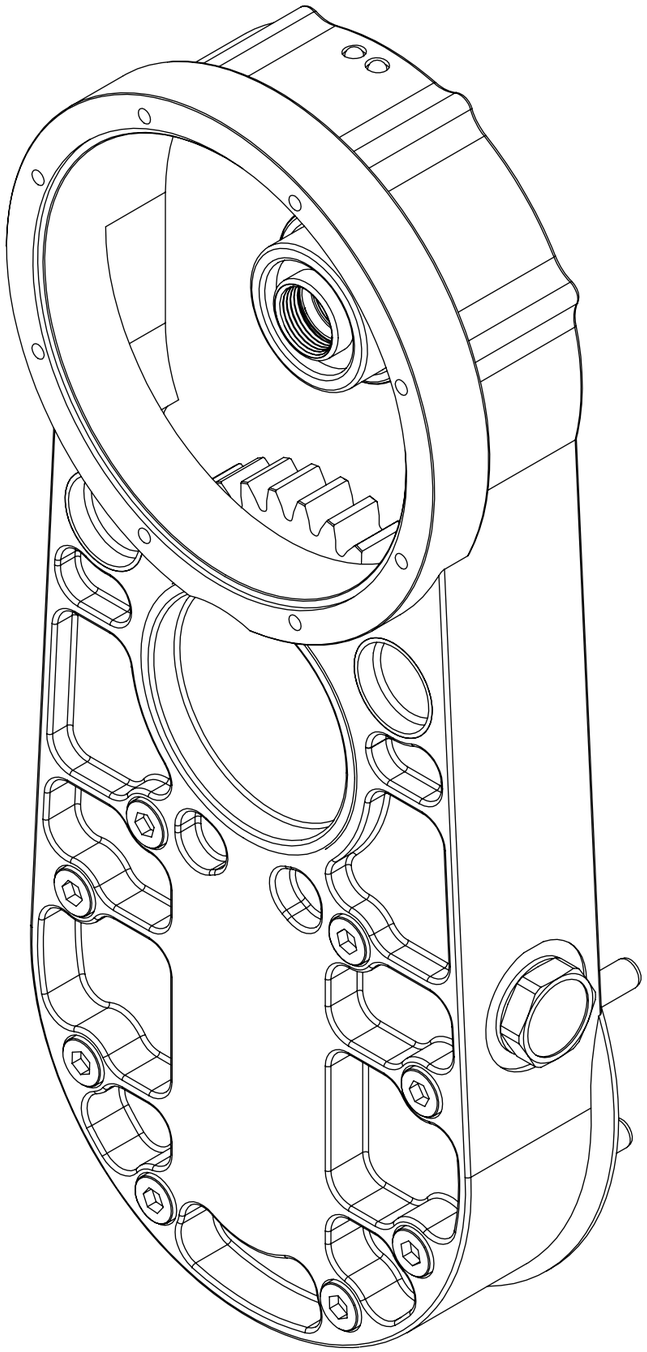

Assembled View

Material		Description: Arm Housing Assembly, 8-20iQ		
Geometric Tolerance	Sheet 2/3	Mass in Gram	Dim.in mm	Note
TRACTIVE		Date	Proj	Part Number: A5600013
		Drawn by	Designed by: JG	Scale: 1:1.5

Revision: A

Approved

Model: A5600013 Rev. A

Tractive AB
Gjutargatan 54 S-781 70 Borlänge
Tel +46 243 22 11 55 www.tractive.se

This drawing is the property of Tractive AB. Its submission does not include or carry the right to make, use or sell what is illustrated without the written consent of Tractive AB.

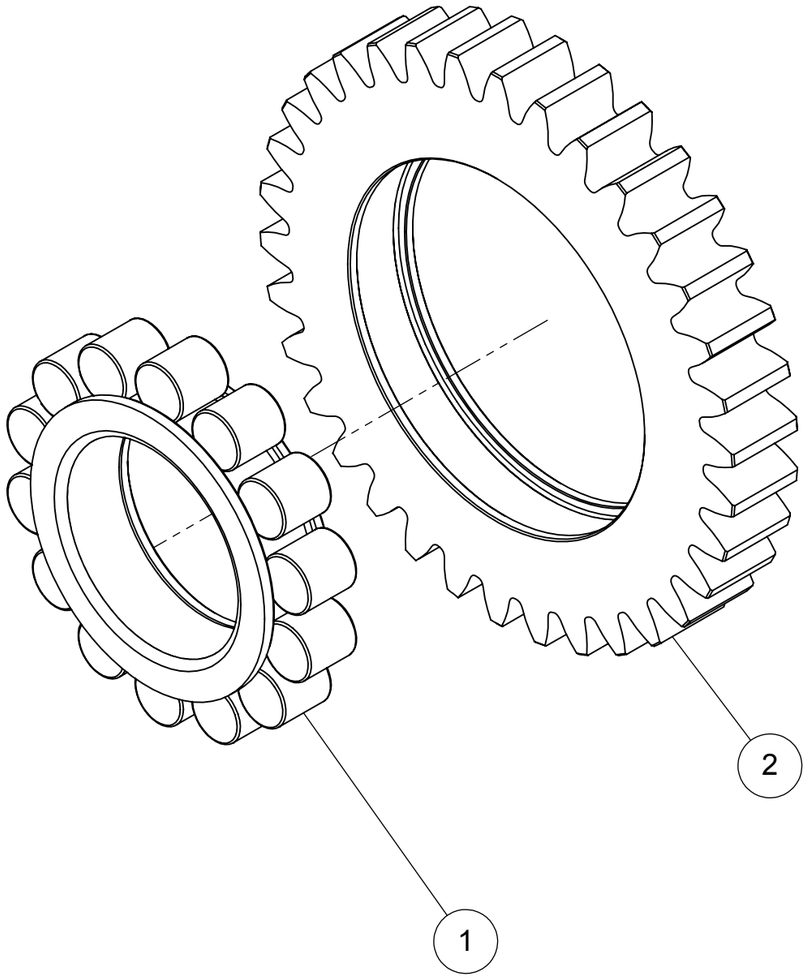

ITEM NO.	PART/ASSY NUMBER	DESCRIPTION	QTY.
1	20170208-MOD	Tractive bearing, NUP208, modified	1
2	35371800	Intermediate gear, 34T	1

Part Number 35371801	Description Intermediate gear arm 34T NUP208cpl			
Material	Geometric Tolerance	Proj	Description	
Date	Dim. in mm	Mass in Gram $PRP@Mass	Sheet $1/1	Description
Drawn by / Org. approved by / Designed by / Last changed by	THIS DRAWING IS THE PROPERTY OF Tractive AB. ITS SUBMISSION DOES NOT INCLUDE OR CARRY THE RIGHT TO MAKE, USE OR SELL WHAT IS ILLUSTRATED WITHOUT THE WRITTEN CONSENT OF Tractive AB.	Revision --00	TRACTIVE	

Gjutargatan 54 S-781 70 Borlänge
Tel +46 243 22 11 55 Fax +46 243 22 11 80
www.tractive.se / www.pentruder.com

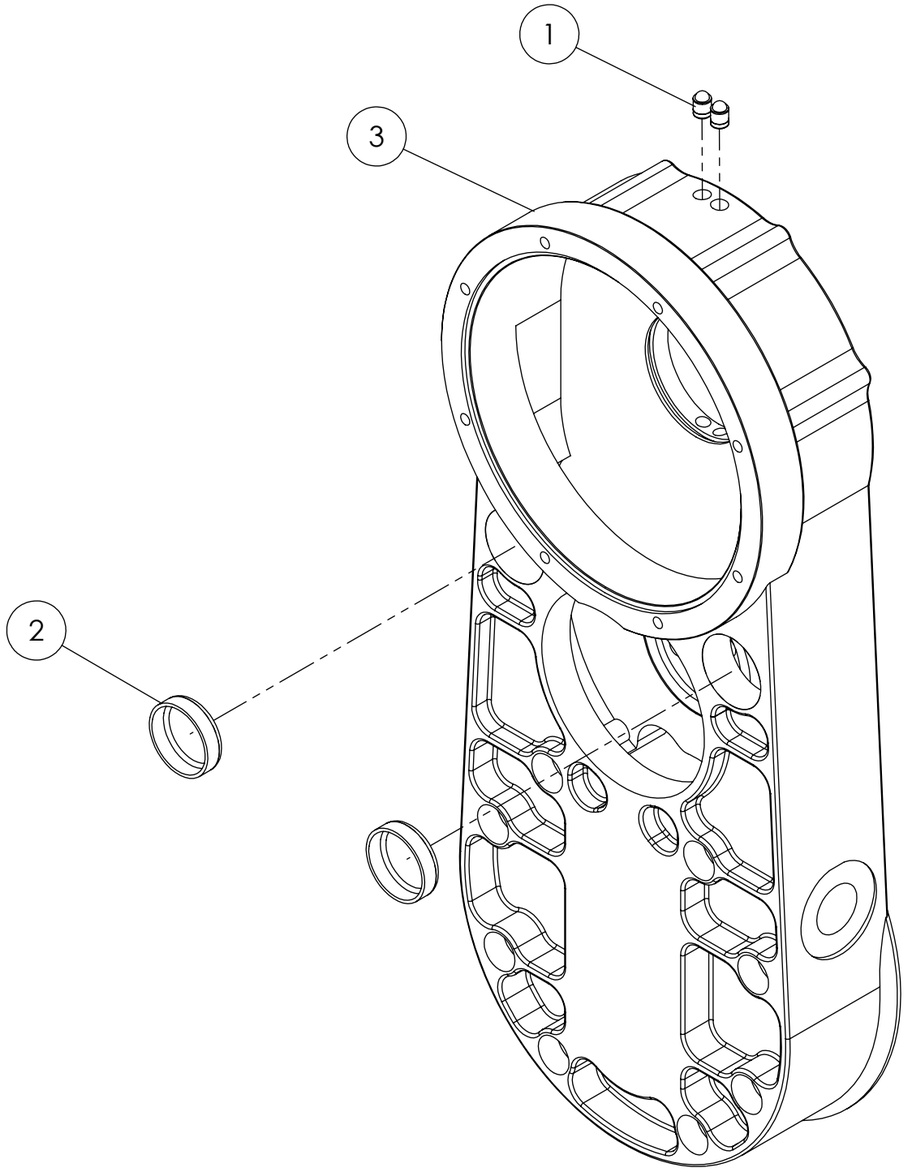

ITEM NO.	PART NUMBER	DESCRIPTION	QTY.
1	25010100	Plug MB 800-060	2
2	25110200	Plug Ø 22	2
3	56010600	Arm, 8 - 20iQ	1

Assy. Number		A5600014
Assy. Description		Housing Assy, 8-20IQ
Date	2011-07-15	TRACTIVE
Revision	01	Gjutargatan 54 S-781 70 Borlänge
Drawn	KRT	Tel +46 243 22 11 55
Approved	AJ	Fax +46 243 22 11 80
Supercedes		www.tractive.se / www.pentruder.com

THIS DRAWING IS THE PROPERTY OF **Tractive AB**. ITS SUBMISSION DOES NOT INCLUDE OR CARRY THE RIGHT TO MAKE, USE OR SELL WHAT IS ILLUSTRATED WITHOUT THE WRITTEN CONSENT OF **Tractive AB**.

Scale	1:2	
Drawing Size	A3	SHEET 1 OF 2

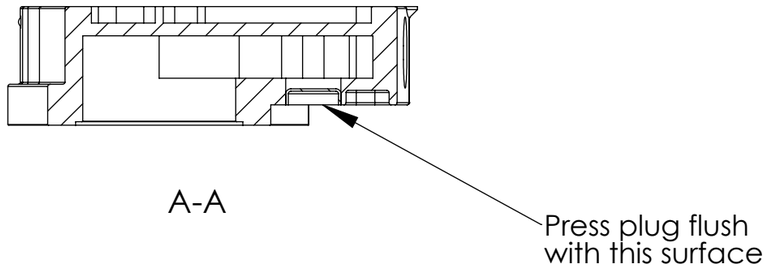

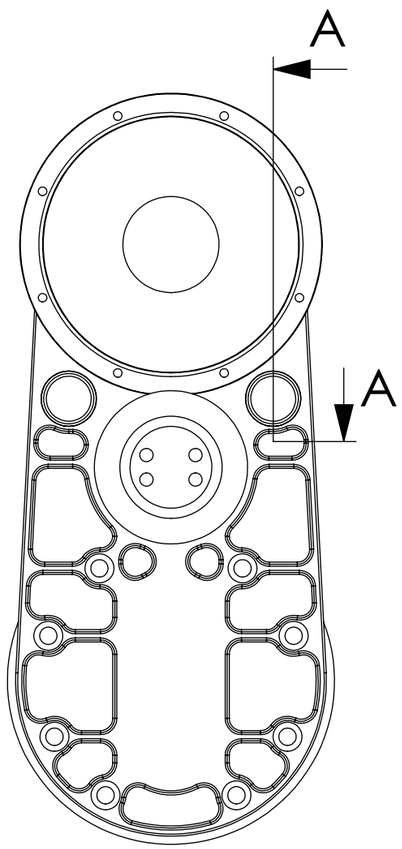

Front View

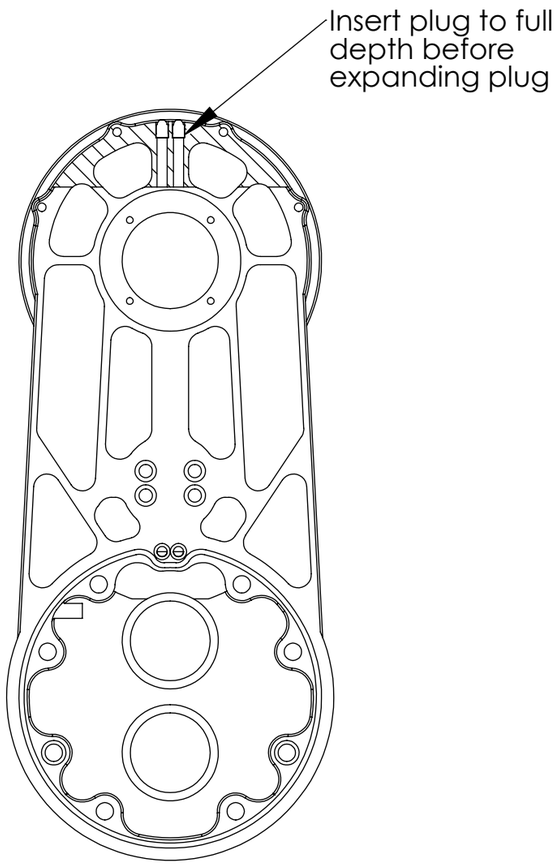

Back View

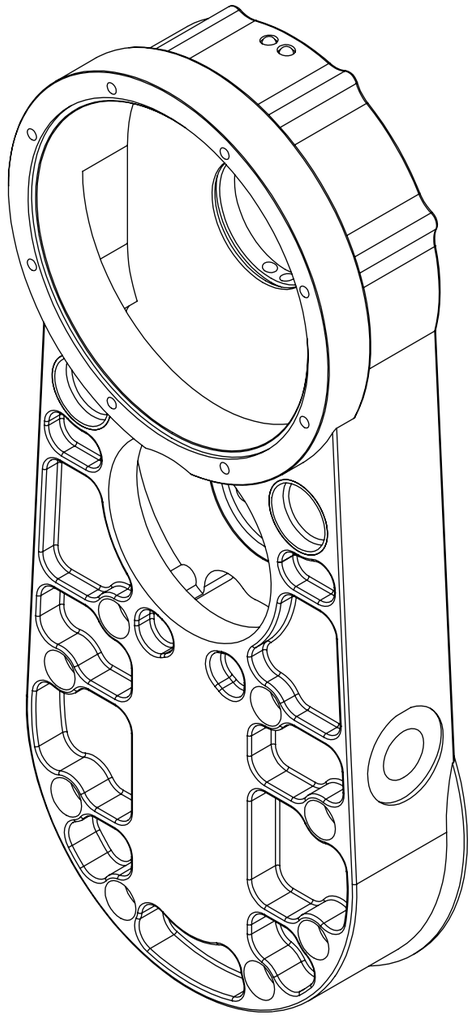

Assembled View

Assy. Number		A5600014
Assy. Description		Housing Assy, 8-20IQ
Date	2011-07-15	TRACTIVE
Revision	01	Gjutargatan 54 S-781 70 Borlänge
Drawn	KRT	Tel +46 243 22 11 55
Approved	AJ	Fax +46 243 22 11 80
Supercedes		www.tractive.se / www.pentruder.com
THIS DRAWING IS THE PROPERTY OF **Tractive AB**. ITS SUBMISSION DOES NOT INCLUDE OR CARRY THE RIGHT TO MAKE, USE OR SELL WHAT IS ILLUSTRATED WITHOUT THE WRITTEN CONSENT OF **Tractive AB**.		Scale 1:2
		Drawing Size A3 SHEET 2 OF 2